2W SIP Package DC-DC Unregulated Converter SPUN02 & DPUN02 series



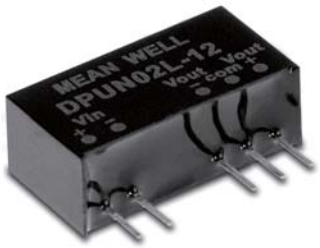

Automate Industrial Security Network Telecom

Features

- SIP7 package with industry standard pinout
- Operating temperature range -40 ~ +105℃
- Comply to BS EN/EN55032 radiated Class A without additional components
- High efficiency up to 87%
- Protection: Short circuit(continuous)/Over load
- 3KVDC I/O isolation
- Low cost
- 3 years warranty

Applications

- Telecom/datacom system
- Wireless network
- Industrial control facility
- Instrument
- Analyzer
- Detector
- Data switch

GTIN CODE

MW Search: https://www.meanwell.com/serviceGTIN.aspx

Description

SPUN02 and DPUN02 series are 2W isolated and unregulated module type DC-DC converter with SIP7 package. It features international standard pins, a high efficiency up to 87%, wide working temperature range -40~+105℃, 3KVDC I/P-O/P isolation voltage, compliance to BS EN/EN55032 radiated Class A without additional components, short circuit protection, etc. The models account for different input voltage 5V/12V/24V±10%, and various output voltage, 5V/12V/15V for single output and ±5V/±12V/±15V for dual outputs, which are suitable for all kinds of systems, Such as industrial control, telecommunication field, distributed power architecture, and so on.

Model Encoding

S PUN02 L – 12

- 12 — Output voltage (5/12/15Vdc，±5/±12/±15Vdc)
- L — Input voltage (L: 4.5 ~ 5.5Vdc，M: 10.8 ~ 13.2Vdc，N: 21.6 ~ 26.4Vdc)
- PUN02 — Rated wattage
- S — Series name { S:Single output / D:Dual output

Distribuída no Brasil pela LRI | vendas@lri.com.br | 51 2129-3000

MODEL SELECTION TABLE

ORDER NO.	INPUT			OUTPUT		EFFICIENCY (TYP.)	CAPACITOR LOAD (MAX.)
	INPUT VOLTAGE (RANGE)	INPUT CURRENT		OUTPUT VOLTAGE	OUTPUT CURRENT		
		NO LOAD	FULL LOAD				
SPUN02L-05	5V (4.5 ~ 5.5V)	40mA	488mA	5V	0 ~ 400mA	81%	220μF
SPUN02L-12		50mA	473mA	12V	0 ~ 167mA	84%	220μF
SPUN02L-15		55mA	478mA	15V	0 ~ 134mA	84%	220μF
DPUN02L-05		40mA	482mA	±5V	±0 ~ 200mA	82%	*100μF
DPUN02L-12		50mA	469mA	±12V	±0 ~ 83mA	84%	*100μF
DPUN02L-15		45mA	473mA	±15V	±0 ~ 67mA	86%	*100μF
SPUN02M-05	12V (10.8 ~ 13.2V)	20mA	203mA	5V	0 ~ 400mA	81%	220μF
SPUN02M-12		20mA	192mA	12V	0 ~ 167mA	86%	220μF
SPUN02M-15		20mA	193mA	15V	0 ~ 134mA	86%	220μF
DPUN02M-05		20mA	198mA	±5V	±0 ~ 200mA	83%	*100μF
DPUN02M-12		20mA	193mA	±12V	±0 ~ 83mA	87%	*100μF
DPUN02M-15		20mA	193mA	±15V	±0 ~ 67mA	87%	*100μF
SPUN02N-05	24V (21.6 ~ 26.4V)	10mA	102mA	5V	0 ~ 400mA	81%	220μF
SPUN02N-12		10mA	96mA	12V	0 ~ 167mA	85%	220μF
SPUN02N-15		10mA	95mA	15V	0 ~ 134mA	86%	220μF
DPUN02N-05		10mA	100mA	±5V	±0 ~ 200mA	81%	*100μF
DPUN02N-12		10mA	96mA	±12V	±0 ~ 83mA	86%	*100μF
DPUN02N-15		10mA	95mA	±15V	±0 ~ 67mA	86%	*100μF

* For each output

Mean Well Brasil

LRI Distribuída no Brasil pela LRI | vendas@lri.com.br | 51 2129-3000

2W SIP Package DC-DC Unregulated Converter SPUN02 & DPUN02 series

SPECIFICATION				
INPUT	VOLTAGE RANGE	L: 4.5 ~ 5.5Vdc , M: 10.8 ~ 13.2Vdc , N: 21.6 ~ 26.4Vdc		
	SURGE VOLTAGE (100ms max.)	5Vin models : 9Vdc ; 12Vin models : 18Vdc ; 24Vin models : 30Vdc		
	FILTER	Internal capacitor		
	PROTECTION	Fuse recommended. 5Vin models: 1A Slow-Blow Type, 12Vin models: 500mA Slow-Blow Type, 24Vin models: 250mA Slow-Blow Type		
	INTERNAL POWER DISSIPATION	500mW		
OUTPUT	VOLTAGE ACCURACY	±3.0% max.		
	RATED POWER	2W		
	RIPPLE & NOISE Note.2	100mVp-p(150mV for SPUN02L-05/12)		
	LINE REGULATION Note.3	1.2% for 1% input variation		
	LOAD REGULATION Note.4	10%		
	SWITCHING FREQUENCY (Typ.)	60KHz		
PROTECTION	SHORT CIRCUIT	Protection type: Continuous, automatic recovery		
	OVERLOAD	Protection type : Recovers automatically after fault condition is removed		
ENVIRONMENT	COOLING	Free-air convection		
	WORKING TEMP.	-40 ~ +105℃ (Refer to "Derating Curve")		
	CASE TEMPERATURE	+105℃ max.		
	WORKING HUMIDITY	20% ~ 90% RH non-condensing		
	STORAGE TEMP., HUMIDITY	-55 ~ +125℃, 10 ~ 95% RH non-condensing		
	TEMP. COEFFICIENT	±0.05% / ℃ (0 ~ 85℃)		
	SOLDERING TEMPERATURE	1.5mm from case of 1 ~ 3sec./260℃ max.		
	VIBRATION	10 ~ 500Hz, 2G 10min./1cycle, period for 60min. each along X, Y, Z axes		
SAFETY & EMC (Note.5)	SAFETY STANDARDS	EAC TP TC 020/2011 approved		
	WITHSTAND VOLTAGE	I/P-O/P:3KVDC		
	ISOLATION RESISTANCE	I/P-O/P:100M Ohms / 500VDC / 25℃/ 70% RH		
	ISOLATION CAPACITANCE (Typ.)	18pF		
	EMC EMISSION	**Parameter**	**Standard**	**Test Level / Note**
		Conducted	BS EN/EN55032(CISPR32)	N/A
		Radiated	BS EN/EN55032(CISPR32)	Class A
	EMC IMMUNITY	**Parameter**	**Standard**	**Test Level / Note**
		ESD	BS EN/EN61000-4-2	Level 2, ±8KV air, ±4KV contact
		Radiated Susceptibility	BS EN/EN61000-4-3	Level 2, 3V/m
		EFT/Burest	BS EN/EN61000-4-4	Level 1, 0.5KV
		Surge	BS EN/EN61000-4-5	Level 1, 0.5KV Line-Line
		Conducted	BS EN/EN61000-4-6	Level 2, 3V(e.m.f.)
		Magnetic Field	BS EN/EN61000-4-8	Level 2, 3A/m
OTHERS	MTBF	3.3Mhrs MIL-HDBK-217F(25℃)		
	DIMENSION (L*W*H)	19.6*7.2*10.2mm (0.77*0.28*0.40 inch)		
	CASE MATERIAL	Non-Conductive black plastic (UL 94V-0 rated)		
	PACKING	2.7g ; 14pcs/per tube, 2058pcs/147 tube/per carton		

NOTE

1.All parameters are specified at normal input(L:5Vdc, M:12Vdc, N:24Vdc), rated load, 25℃ 70% RH ambient.
2.Ripple & noise are measured at 20MHz by using a 12" twisted pair terminated with a 0.1μf & 47μf capacitor.
3.Line regulation is measured from low line to high line at rated load.
4.Load regulation is measured from 20% to 100% rated load.
5.The final equipment must be re-confirm that it still meet EMC directives. For guidance on how to perform these EMC tests, please refer to “EMI testing of component power supplies.”(as available on http://www.meanwell.com)
※ Product Liability Disclaimer ： For detailed information, please refer to https://www.meanwell.com/serviceDisclaimer.aspx

Mean Well Brasil

LRI Distribuída no Brasil pela LRI | vendas@lri.com.br | 51 2129-3000

■ Mechanical Specification

- All dimensions in mm(inch)
- Tolerance:x.x±0.25mm(x.xx±0.01")
  x.xx±0.13mm(x.xxx±0.005")
- Pin pitch tolerance:±0.05mm (±0.002")

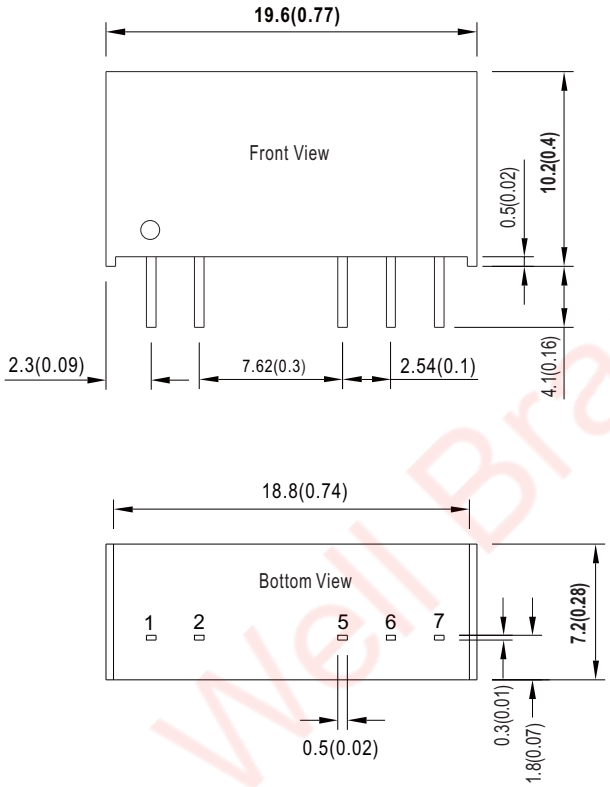

■ Pin Configuration

Pin-Out		
Pin No.	SPUN02 (Single output)	DPUN02 (Dual output)
1	+Vin	+Vin
2	-Vin	-Vin
5	-Vout	-Vout
6	No pin	Common
7	+Vout	+Vout

■ Derating Curve

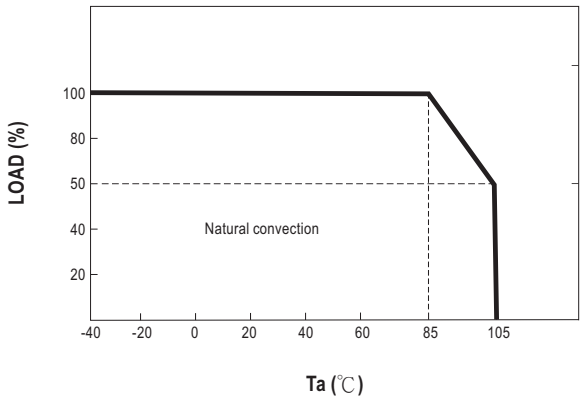

Mean Well Brasil

LRI Distribuída no Brasil pela LRI | vendas@lri.com.br | 51 2129-3000

■ Packing

Standard Tube Packing	MPQ Per Tube (PCS)	One Tube G.W.	Max. Q'TY/ Carton(PCS)	One Carton G.W.
Unit : mm 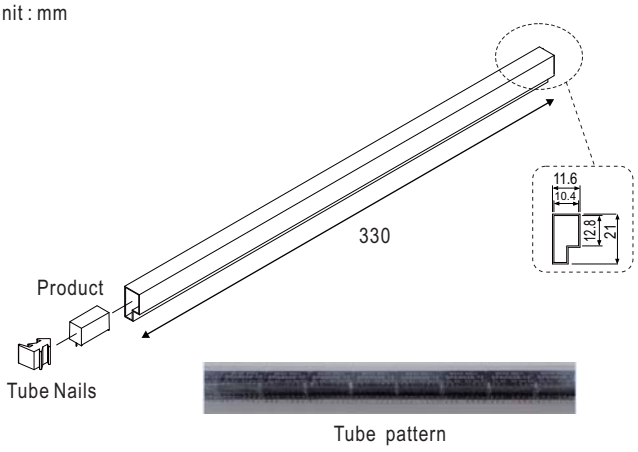 Tube pattern 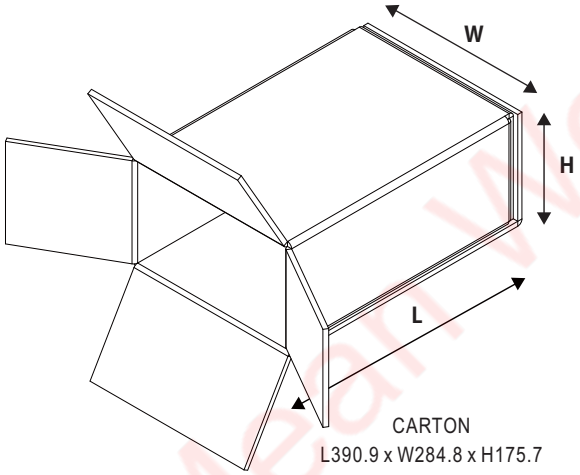 CARTON L390.9 x W284.8 x H175.7	14	56.3g	2058	10.28Kg

■ Installation Manual

Please refer to : http://www.meanwell.com/manual.html

Mean Well Brasil

LRI Distribuída no Brasil pela LRI | vendas@lri.com.br | 51 2129-3000