1Amp SMD Package Non-Isolated Programmable DC-DC POL Regulator SPOL-01 series



Features

- Land Grid Array(LGA)surface mount
- Ultra compact size (12.4x12.4x4mm)
- 3~14Vdc wide input range
- Programmable output voltage from 0.9~5.5Vdc
- High efficiency up to 90%@ 12Vin
- Remote ON/OFF control
- Ultra-wide operating temperature range -40 ~ +82℃
- Protections: Short circuit (Continuous)
- No minimum load required
- 3 years warranty

Applications

- Telecom system
- Server and storage equipment
- Industrial control facility
- Distributed power architectures
- Intermediate bus voltage applications
- Renewable energy
- Battery management system(BMS)
- Field programmable gate arrary(FPGA)

GTIN CODE

MW Search: https://www.meanwell.com/serviceGTIN.aspx

Description

The SPOL-01 series is a 1 Ampere non-isolated programmable point-of-load DC-to-DC converter with SMD package ideal for embedded applications. Its main features include ultra-compact size (12.4*12.4*4mm), wide input range 3~14Vdc and tunable output voltage from 0.9~5.5 Vdc via external resistor, wide working temperature -40~+82℃, remote ON/OFF function and short circuit protection. This makes it very suitable for intermediate bus architectures found in various applications such as industrial, distributed power, telecom and datacom applications.

Model Encoding

SPOL – 01

- 01 → Output current (1 Amp)
- SPOL → Series name

Distribuída no Brasil pela LRI | vendas@lri.com.br | 51 2129-3000

ORDER NO.	INPUT			OUTPUT		EFFICIENCY (TYP.)	CAPACITOR LOAD (MAX.)
	V_{in} RANGE	I_{in}		V_{out}	I_{out}		
		NO LOAD	FULL LOAD				
SPOL-01	Normal 12V (3 ~ 14V)	15mA	510mA	5.5V	1.0A max.	90%@5.5V	200μF
			460mA	5V		89.5%@5V	
			320mA	3.3V		86%@3.3V	
			250mA	2.5V		83%@2.5V	
			200mA	1.8V		79%@1.8V	
			170mA	1.5V		75%@1.5V	
			150mA	1.2V		71%@1.2V	
			120mA	0.9V		67%@0.9V	

Note: The efficiency is test by normal input 12Vdc and full load @25℃

■ Output Voltage Trim

The T_{rim} resistor equation

$$R_{trim}(K\Omega) = \frac{49.1355}{V_o - 0.895} - 10.7$$

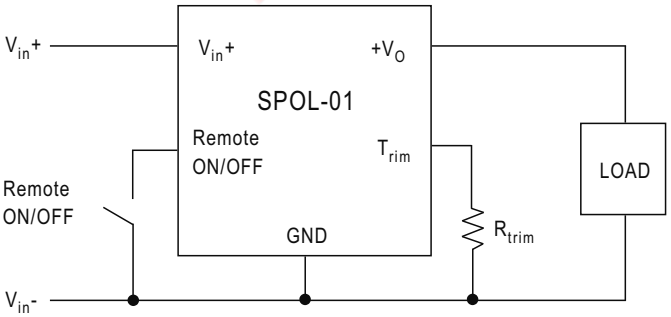

Output Voltage	Calculated R_{trim} (KΩ)
5.5V	0(Short)
5V	1.3
3.3V	9.8
2.5V	20.2
1.8V	44.2
1.5V	71.3
1.2V	150
0.895V	∞(Open)

The output voltage may be adjusted over a limited range by connection an external trim resistor (R_{trim}) between the trim pin and ground.

Mean Well Brasil

LRI Distribuída no Brasil pela LRI | vendas@lri.com.br | 51 2129-3000

SPECIFICATION				
INPUT	VOLTAGE RANGE	3~14Vdc		
	START-UP TIME	6ms		
	START-UP VOLTAGE	3.0V		
	UNDER VOLTAGE SHUTDOWN (Typ.)	2.2V		
	RECOMMEND EXTERNAL FUSE	2A		
OUTPUT	VOLTAGE ACCURACY	±3%		
	RATED CURRENT	1.0A		
	OUTPUT VOLTAGE TRIM Note.2	0.9V ~ 5.5V max. (Please see page 2 for more detail)		
	RATED POWER	5.5W max.		
	RIPPLE & NOISE Note.3	40mVp-p		
	LINE REGULATION Note.4	±0.3%		
	LOAD REGULATION Note.5	±0.3%		
	SWITCHING FREQUENCY (Typ.)	800KHz		
	MINIMUM LOAD	No minimum load required		
PROTECTION	SHORT CIRCUIT	Protection type : Continuous(No damage), automatic recovery		
FUNCTION	REMOTE CONTROL	Positive Power ON : Open or 1.6Vdc < R.C < 5Vdc Positive Power OFF : Short or 0Vdc < R.C <0.1Vdc		
ENVIRONMENT	COOLING METHOD	Free-air convection		
	WORKING TEMP.	-40 ~ +82℃ (Refer to "Derating Curve")		
	WORKING HUMIDITY	20% ~ 90% RH non-condensing		
	STORAGE TEMP., HUMIDITY	-55 ~ +125℃, 10 ~ 95% RH non-condensing		
	TEMP. COEFFICIENT	0.03% / ℃ (0 ~ 90℃)		
	SOLDERING TEMPERATURE	Please see page 7 for more detail		
	VIBRATION	10 ~ 500Hz, 2G 10min./1cycle, period for 60min. each along X, Y, Z axes		
SAFETY & EMC (Note.6)	SAFETY STANDARDS	LVD BS EN/EN62368-1 approved ; EAC TP TC 004 pending		
	EMC EMISSION	**Parameter**	**Standard**	**Test Level / Note**
		Conducted	BS EN/EN55032	Class A(with external components)
		Radiated	BS EN/EN55032	Class A(with external components)
	EMC IMMUNITY	**Parameter**	**Standard**	**Test Level / Note**
		ESD	BS EN/EN61000-4-2	Level 3, ±8KV air, ±6KV contact
		EFT/Burest	BS EN/EN61000-4-4	Level 3, 2.0KV
		Surge	BS EN/EN61000-4-5	Level 4, 2KV
OTHERS	MTBF	2600Khrs MIL-HDBK-217F(25℃)		
	DIMENSION (L*W*H)	12.4*12.4*4.0mm (0.488*0.488*0.157 inch)		
	PACKING	1g ; Please see page 10 for more detail		
NOTE	1.All parameters are specified at normal input(12Vdc), rated load, 25℃ 70% RH ambient. 2.The output voltage range is limited by Vin. (Vout≦Vin *0.7Vdc). 3.Ripple & noise are measured at 20MHz by using a 12" twisted pair terminated with a 0.1μf capacitor, show at Vout= 1Vdc. 4.Line regulation is measured from low line to high line at rated load. 5.Load regulation is measured from 10% to 100% rated load. 6.The final equipment must be re-confirm that it still meet EMC directives. For guidance on how to perform these EMC tests, please refer to "EMI testing of component power supplies."(as available on http://www.meanwell.com) ※ Product Liability Disclaimer : For detailed information, please refer to https://www.meanwell.com/serviceDisclaimer.aspx			

Distribuída no Brasil pela LRI | vendas@lri.com.br | 51 2129-3000

■ Mechanical Specification

• Tolerance: ±0.25mm

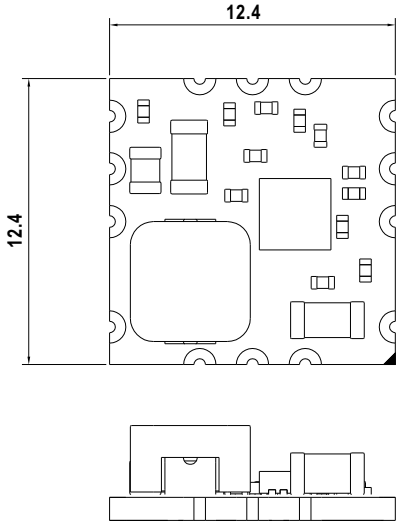

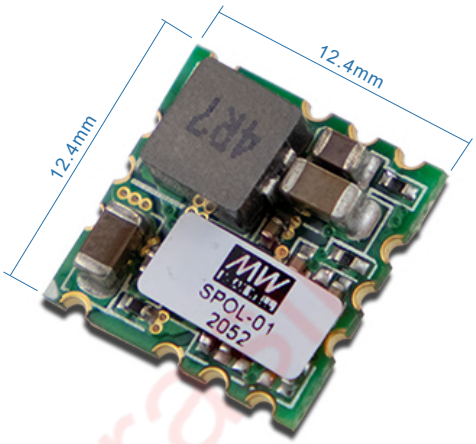

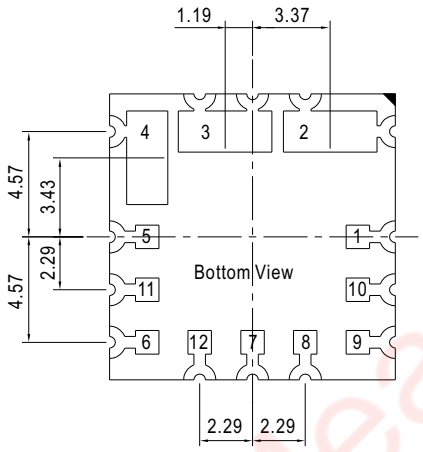

Pad 1&5~12=1.02x1.02mm
Pad 2~4=4.06x1.78mm

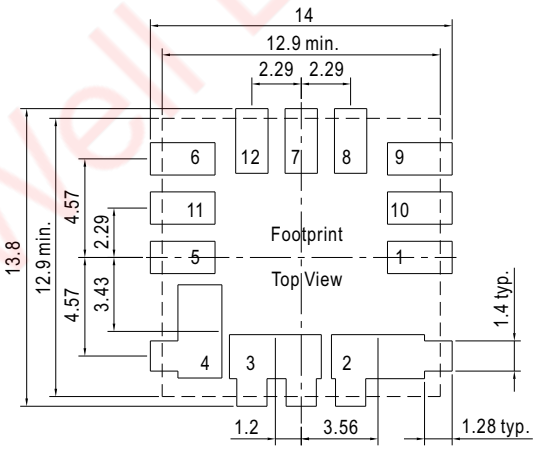

Pad 1&5~12=3x1.5mm
Pad 2&4=4.32x2.04mm
Pad 3=4.26x2.04mm

■ Pin Define

Pin-Out			
Pin No.	Function	Pin No.	Function
1	Remote ON/OFF	4	Vout
2	Vin	5,8,9,10,12	N.C
3,7,11	GND	6	Trim

N.C= No Connection

Distribuída no Brasil pela LRI | vendas@lri.com.br | 51 2129-3000

■ Derating Curve

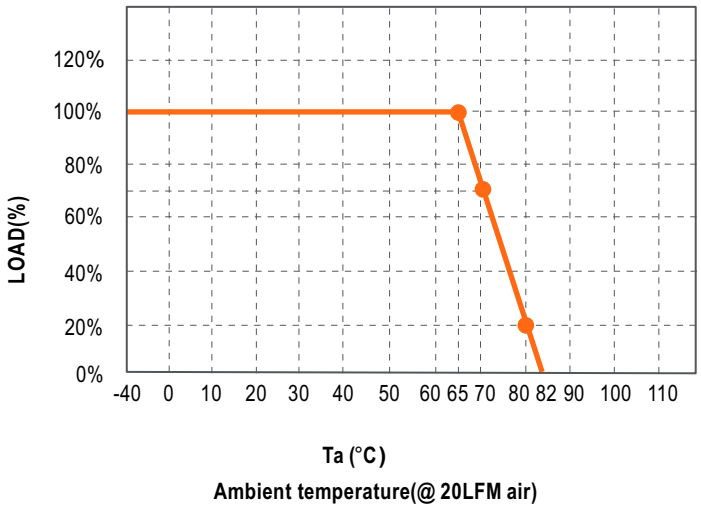

■ Output Voltage vs. Input Voltage Set Point Area Plot

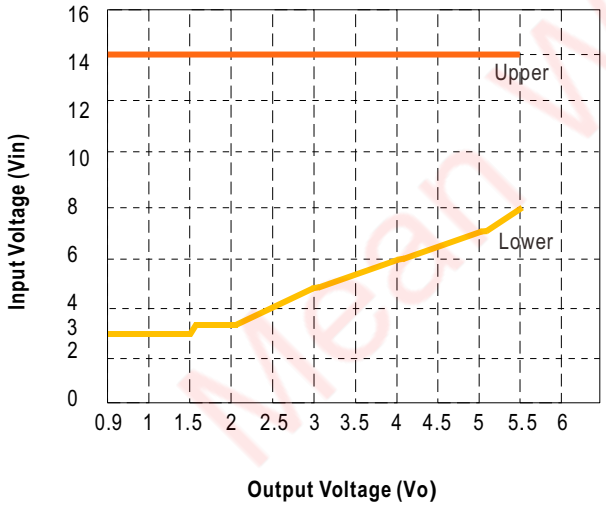

Mean Well Brasil

LRI Distribuída no Brasil pela LRI | vendas@lri.com.br | 51 2129-3000

■ Remote ON/OFF Example Application Circuit

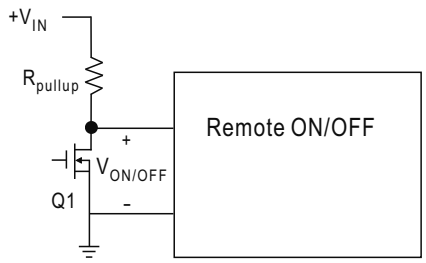

The circuit configuration for using the Remote ON/OFF pin is shown in figure. And the logic type active mode as the description below.

SPOL-01 ON : Q1 OFF
SPOL-01 OFF : Q1 ON

■ Surface Mount Information

1.Pick and Place

The SPOL-01 module use an open frame construction and is designed for a fully automated assembly process.
We suggest the pick and place operations is inductor.

2.MSL (Moisture Sensitivity Level) Rating

The SPOL-01 module have a MSL rating of level 3.

3.Storage and Handling

The recommended storage environment and handling procedures for moisture-sensitive surface mount packages is detailed in J-STD-033(Handling, Packing, Shipping and Use of Moisture/Reflow Sensitive Surface Mount Devices).
Moisture barrier bags (MBB) with desiccant are required for MSL ratings of 3 or greater. These sealed packages should not be broken until time of use. Once the original package is broken, the floor life of the product at conditions of ≦ 30°C and 60% relative humidity 168 hours varies according to the MSL rating (see J-STD-033). The shelf life for dry packed SMT packages will be a maximum of 12 months from the bag seal date, when stored at the following conditions: < 40°C, < 90% relative humidity.

4.Post Solder Cleaning and Drying Considerations

To avoid contamination on the soldering pads extra care has to be taken when handling the boards. Clean soldering surfaces don not generate as much gases when the flux reduce the metal oxides or react with contaminants during the soldering process.

5.Nozzle

The SPOL-01 weight has been kept to a minimum by using open frame construction. Variables such as nozzle size, tip style, vacuum pressure and placement speed should be considered to optimize this process.

Mean Well Brasil

Distribuída no Brasil pela LRI | vendas@lri.com.br | 51 2129-3000

6.Lead-free Reflow Profile

Power Systems will comply with J-STD-020 (Moisture/Reflow Sensitivity Classification for non-hermetic Solid State Surface Mount Devices) for both Pb-free solder profiles and MSL classification procedures. This standard provides a recommended forced-air-convection reflow profile based on the volume and thickness of the package. The suggested Pb-free solder paste is Sn/Ag/Cu (SAC). The recommended linear reflow profile using Sn/Ag/Cu solder is shown. Soldering outside of the recommended profile requires testing to verify results and performance.

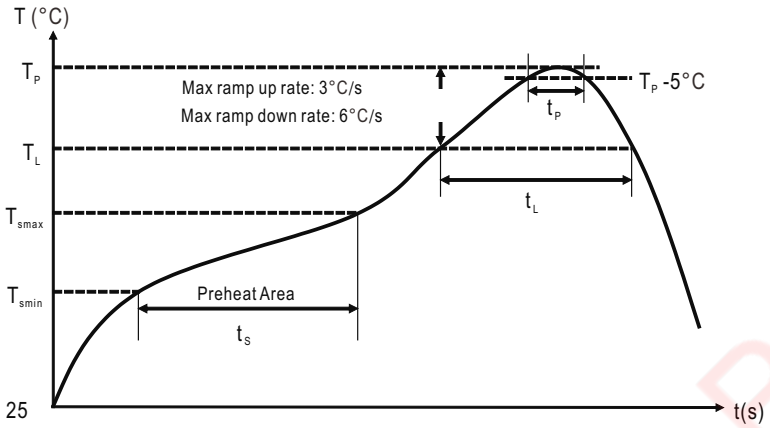

Profile	Pb-Free Assembly
Average ramp-up rate (Tsmax to TP)	3°C/s max.
Preheat Temperature Min. (Tsmin) Temperature Max. (Tsmax) Ts (Tsmin to Tsmax)	 150°C 200°C 60-120s
Temperature (TP)	245°C
Time maintained above Temperature (TL) Time (tl)	 217°C 60-150s
Time within 5°C of the specified Peak temperature (TP)	20-40s
Ramp down rate (TP to TL)	6°C/s max
Time 25°C to peak temperature	8 minutes max.

MeanWell Brasil

LRI Distribuída no Brasil pela LRI | vendas@lri.com.br | 51 2129-3000

■ EMC Suggestion Circuit

※ Reguired external components to meet BS EN/EN55032 radiated Class A

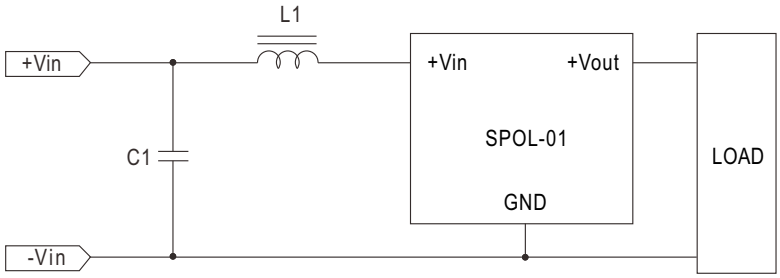

C1	L1
2.2μF(MLCC)	1.5μH

※ Reguired external components to meet EFT and surge

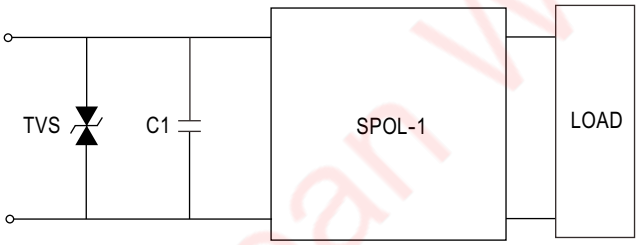

TVS	C1
5.0SMLJ22CA-IP	2200μH

Mean Well Brasil

Distribuída no Brasil pela LRI | vendas@lri.com.br | 51 2129-3000

■ Typical Application

※ IPC (Industrial PC)

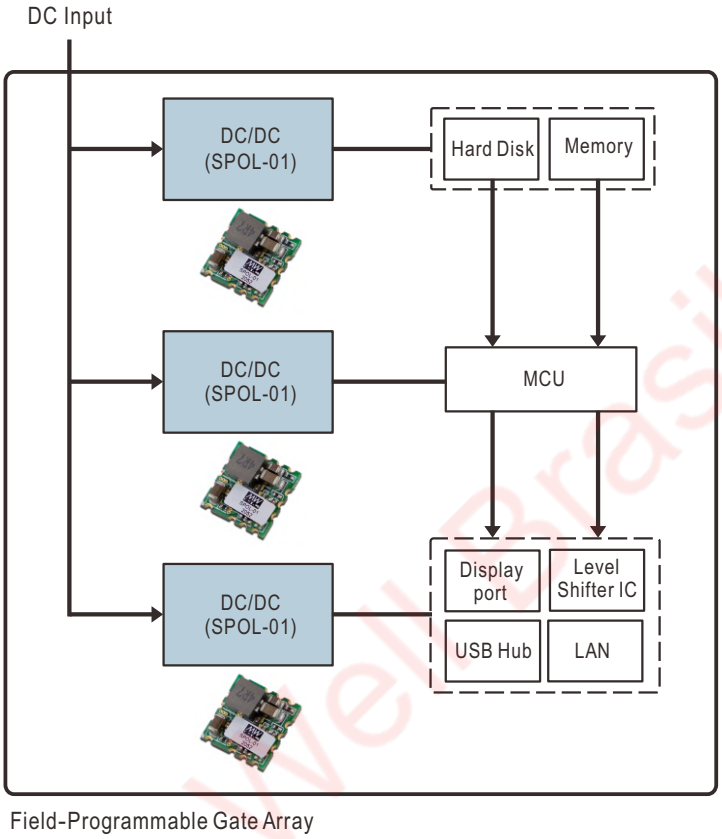

※ Green Energy

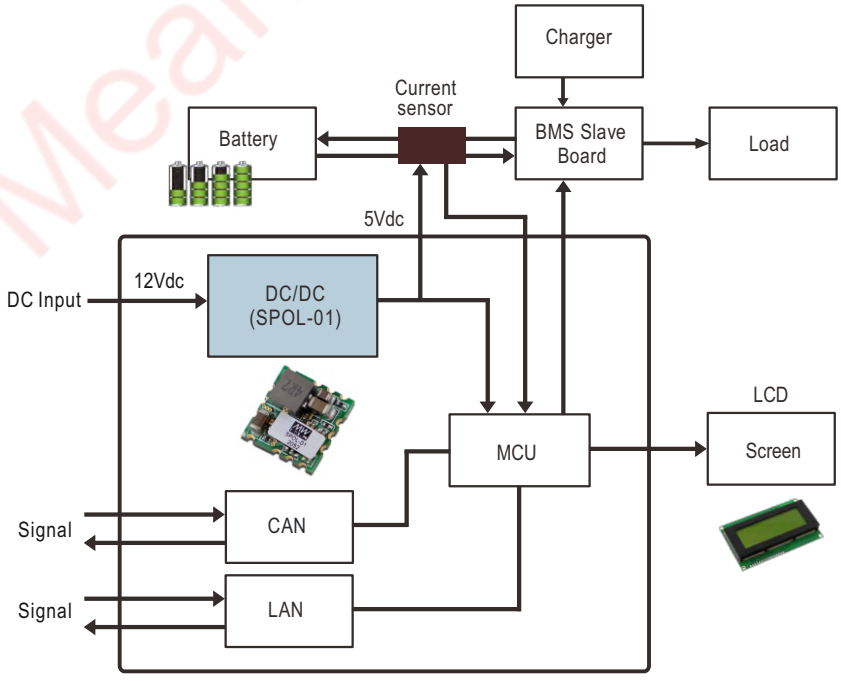

Mean Well Brasil

Distribuída no Brasil pela LRI | vendas@lri.com.br | 51 2129-3000

■ Packing

Reel Packing

Unit : mm

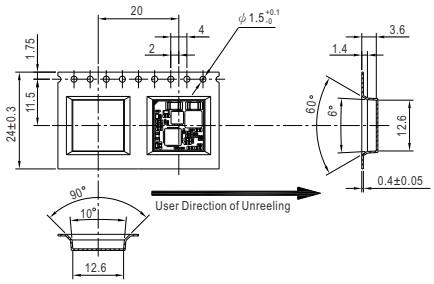



1).10 sprocket hole pitch cumulative tolerance ±0.2 mm.
2).All dimensions meet EIA-481-2A requirements.
3).Component loader per 13" reel : 650 pcs.
4).All dimensions = ±0.1 mm.

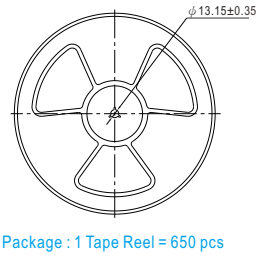

Package : 1 Tape Reel = 650 pcs

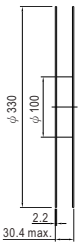

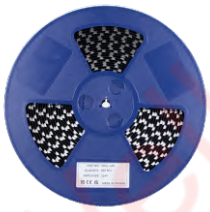



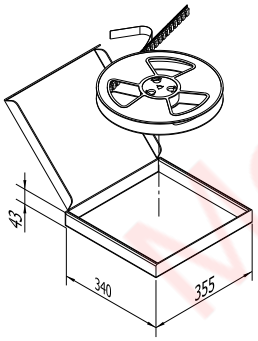

1 Tape Reel = 650 converters

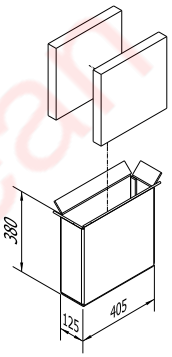

Carton accommodates
2 boxes 1300 converters per carton







MPQ Per Tube (PCS)	One Box G.W.	Max. Q'TY/ Carton(PCS)	One Carton G.W.
650	1.04Kg	1300	2.9Kg

Note: MOQ is not require for sample order. Each tape package consit 650pcs, please consolidate the requirements and place the order with tape package if possible.

■ Installation Manual

Please refer to : http://www.meanwell.com/manual.html

LRI Distribuída no Brasil pela LRI | vendas@lri.com.br | 51 2129-3000