750W Single Output Power Supply

SP-750 series



■ Features :

- Universal AC input / Full range
- AC input active surge current limiting
- Built-in active PFC function,PF>0.96
- Protections: Short circuit / Overload / Over voltage / Over temperature
- Forced air cooling by built-in DC ball bearing fan
- High power density 5.48/inch^3
- Built-in constant current limiting circuit
- With power good and fail signal output
- Built-in remote ON-OFF control
- Built-in remote sense function
- 3 years warranty

SPECIFICATION

MODEL		SP-750-5	SP-750-12	SP-750-15	SP-750-24	SP-750-27	SP-750-48
OUTPUT	DC VOLTAGE	5V	12V	15V	24V	27V	48V
	RATED CURRENT	120A	62.5A	50A	31.3A	27.8A	15.7A
	CURRENT RANGE	0 ~ 120A	0 ~ 62.5A	0 ~ 50A	0 ~ 31.3A	0 ~ 27.8A	0 ~ 15.7A
	RATED POWER	600W	750W	750W	751.2W	750.6W	753.6W
	RIPPLE & NOISE (max.) Note.2	120mVp-p	120mVp-p	120mVp-p	120mVp-p	120mVp-p	120mVp-p
	VOLTAGE ADJ. RANGE	4.75 ~ 5.5V	10 ~ 13.5V	13.5 ~ 16.5V	22 ~ 26.4V	24 ~ 30V	43 ~ 56V
	VOLTAGE TOLERANCE Note.3	±2.0%	±1.0%	±1.0%	±1.0%	±1.0%	±1.0%
	LINE REGULATION	±0.5%	±0.3%	±0.3%	±0.2%	±0.2%	±0.2%
	LOAD REGULATION	±2.0%	±0.5%	±0.5%	±0.5%	±0.5%	±0.5%
	SETUP, RISE TIME	1500ms, 50ms/230VAC 1500ms, 50ms/115VAC at full load					
	HOLD UP TIME (Typ.)	16ms/230VAC 16ms/115VAC at full load					
INPUT	VOLTAGE RANGE	90 ~ 264VAC 127 ~ 370VDC					
	FREQUENCY RANGE	47 ~ 63Hz					
	POWER FACTOR (Typ.)	PF>0.96/230VAC PF>0.99/115VAC at full load					
	EFFICIENCY (Typ.)	80%	85%	87%	89%	89%	90%
	AC CURRENT (Typ.)	8.8A/115VAC 4.2A/230VAC					
	INRUSH CURRENT (Typ.)	27A/115VAC 45A/230VAC					
	LEAKAGE CURRENT	<2.0mA / 240VAC					
PROTECTION	OVERLOAD	105 ~ 125% rated output power					
		Protection type : Constant current limiting, unit will Hiccup after 3 sec.					
	OVER VOLTAGE	5.75 ~ 6.75V	13.8 ~ 16.2V	18 ~ 21V	27.6 ~ 32.4V	31 ~ 36.5V	57.6 ~ 67.2V
		Protection type : Shut down o/p voltage, re-power on to recover					
	OVER TEMPERATURE	Shut down o/p voltage, recovers automatically after temperature goes down					
FUNCTION	POWER GOOD/FAIL	50ms/1ms					
	REMOTE CONTROL Note.4	RC+/RC- short power on, open power off					
ENVIRONMENT	WORKING TEMP.	-20 ~ +60℃ (Refer to "Derating Curve")					
	WORKING HUMIDITY	20 ~ 90% RH non-condensing					
	STORAGE TEMP., HUMIDITY	-40 ~ +85℃, 10 ~ 95% RH non-condensing					
	TEMP. COEFFICIENT	±0.05%/℃ (0 ~ 50℃)					
	VIBRATION	10 ~ 500Hz, 2G 10min./1cycle, 60min. each along X, Y, Z axes					
SAFETY & EMC (Note 5)	SAFETY STANDARDS	UL60950-1, TUV EN60950-1 approved					
	WITHSTAND VOLTAGE	I/P-O/P:3KVAC I/P-FG:2KVAC O/P-FG:0.5KVAC					
	ISOLATION RESISTANCE	I/P-O/P, I/P-FG, O/P-FG:100M Ohms / 500VDC / 25℃/ 70% RH					
	EMC EMISSION	Compliance to EN55011 (CISPR11), EN55032 (CISPR32) Class B, EN61000-3-2,-3					
	EMC IMMUNITY	Compliance to EN61000-4-2,3,4,5,6,8,11, EN55024, EN61000-6-2, EN61204-3, heavy industry level, criteria A					
OTHERS	MTBF	105.4K hrs min. MIL-HDBK-217F (25℃)					
	DIMENSION	278*127*63.5mm (L*W*H)					
	PACKING	2.9Kg; 6pcs / 18.4Kg / 0.98CUFT					

NOTE

1. All parameters NOT specially mentioned are measured at 230VAC input, rated load and 25℃ of ambient temperature.
2. Ripple & noise are measured at 20MHz of bandwidth by using a 12" twisted pair-wire terminated with a 0.1uf & 47uf parallel capacitor.
3. Tolerance : includes set up tolerance, line regulation and load regulation.
4. The power supply unit will have no output if the shorting connector is not assembled between RC+ & RC-.
5. The power supply is considered a component which will be installed into a final equipment. All the EMC tests are been executed by mounting the unit on a 360mm*360mm metal plate with 1mm of thickness. The final equipment must be re-confirmed that it still meets EMC directives. For guidance on how to perform these EMC tests, please refer to “EMI testing of component power supplies.” (as available on http://www.meanwell.com)
6. The ambient temperature derating of 3.5℃/1000m with fanless models and of 5℃/1000m with fan models for operating altitude higher than 2000m(6500ft).

LRI Distribuída no Brasil pela LRI | vendas@lri.com.br | 51 2129-3000

■ Mechanical Specification

Case No.919A Unit:mm

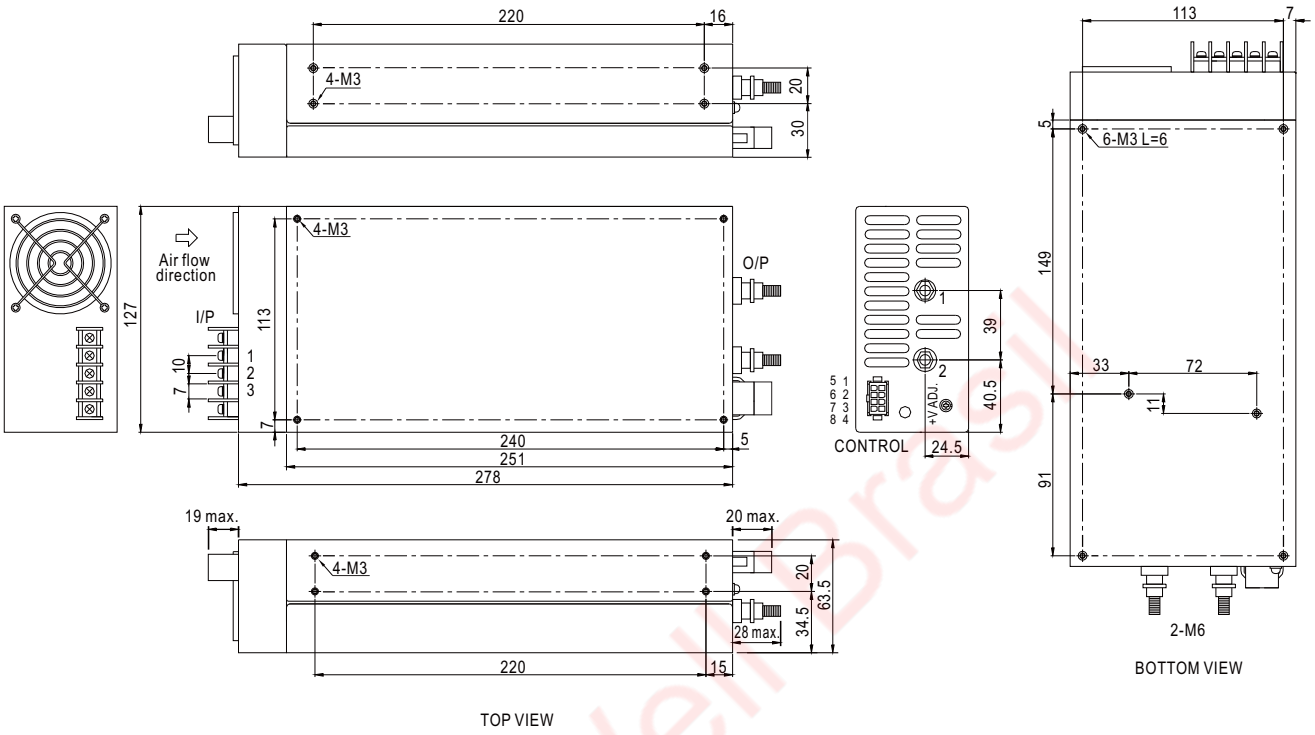

AC Input Terminal
Pin No. Assignment

Pin No.	Assignment
1	AC/L
2	AC/N
3	FG ⏚

DC Output Terminal
Pin No. Assignment

Pin No.	Assignment
1	DC OUTPUT +V
2	DC OUTPUT -V

Control Pin No. Assignment : MOLEX 5559-NP uses 5558male crimp terminal

Pin No.	Assignment	Pin No.	Assignment	Mating connector	Terminal
1	NC	5	NC	MOLEX 5557-NR	MOLEX 5556 Female crimp Terminal receptacle
2	-S	6	PF(Power fail signal)		
3	G	7	+S		
4	RC-	8	RC+		

■ Block Diagram

PFC fosc : 100KHz
PWM fosc : 140KHz

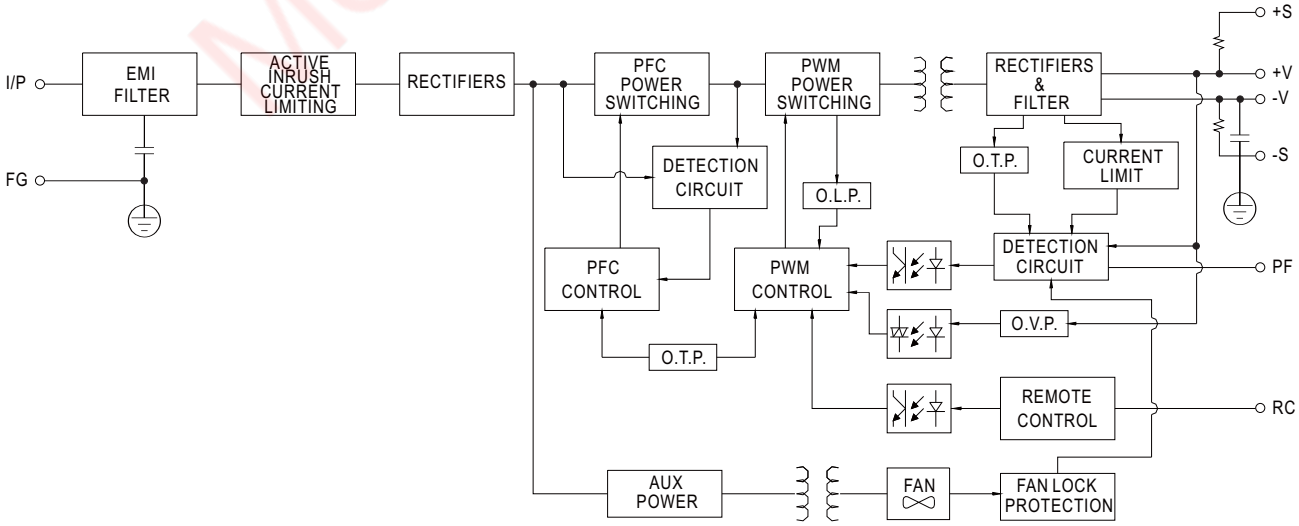

Distribuída no Brasil pela LRI | vendas@lri.com.br | 51 2129-3000

■ Derating Curve

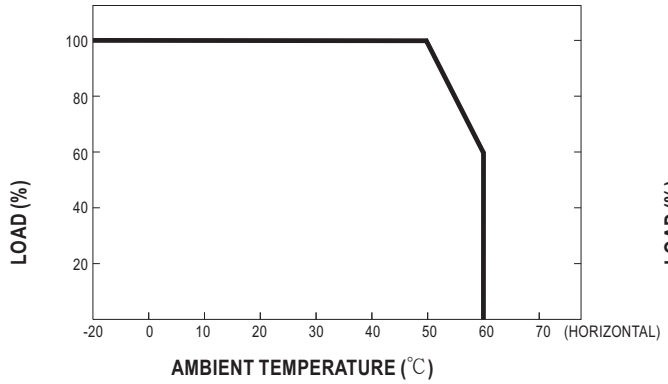

■ Static Characteristics

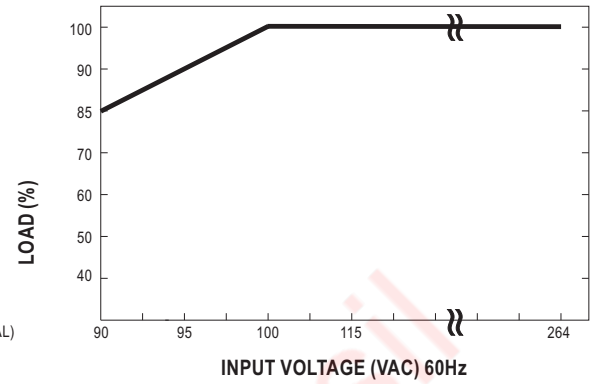

■ Control Terminal Instruction Manual

Power Fail Signal

(1)PF Signal is the voltage difference between "G" and "PF" pin output.

(2)When in power fail signal operation, the minimum output load should be greater than 3% of total output load.

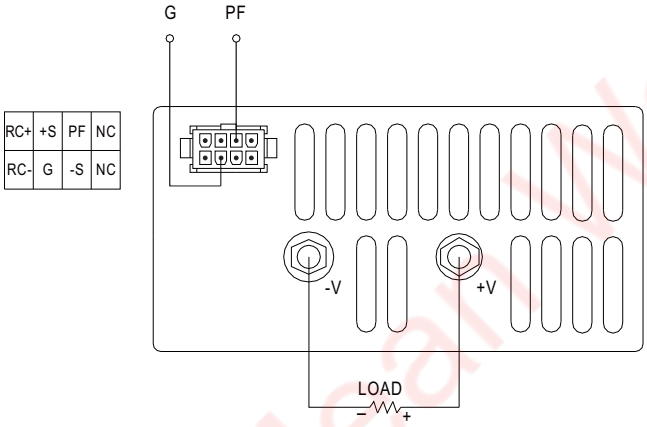

Remote Sensing

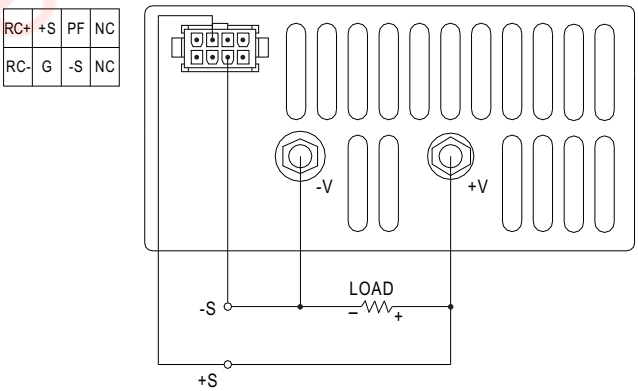

Remote Control

Power ON: RC+/RC- Short

Power OFF: RC+/RC- open

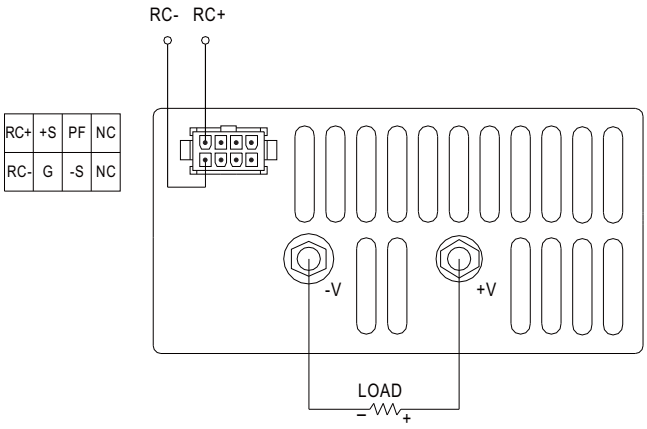

Mean Well Brasil

LRI Distribuída no Brasil pela LRI | vendas@lri.com.br | 51 2129-3000