30W 1"x1" Package DC-DC Regulated Converter SKMW30 & DKMW30 series





Automate Industrial Security Network Telecom

Features

- DIP 1"x1" package with industry standard pinout
- 4:1 ultrawide input range
- Operating temperature range -40 ~ +85℃
- No minimum load required
- Comply to BS EN/EN55032 radiated Class A without additional components
- High efficiency up to 90%
- Protections: Short circuit (Continuous) / Overload / Over voltage / Over temperature / Input under voltage
- 1.5KVDC I/O isolation
- Remote ON/OFF control and Triming output (±10%)
- 3 years warranty

Applications

- Telecom/datacom system
- Wireless network
- Industrial control facility
- Instrument
- Analyzer
- Detector
- Data switch

GTIN CODE

MW Search: https://www.meanwell.com/serviceGTIN.aspx

Description

SKMW30 and DKMW30 series are 30W isolated and regulated module type DC-DC converter with DIP 1"x1" package. It features international standard pins, a high efficiency up to 90%, wide working temperature range -40~+85℃, 1.5KVDC I/P-O/P isolation voltage, compliance to BS EN/EN55032 radiated Class A without additional components, continuous-mode short circuit, overload, over temperature, input under voltage protection, remote ON/OFF and trimmable output voltage etc. The models account for different input voltage 9~36V and 18~75V 4:1 ultrawide input range, and various output voltage, 3.3V/5V/12V/15V for single output and ±12V/±15V for dual outputs, which are suitable for all kinds of systems, such as industrial control, telecommunication field, distributed power architecture, and so on.

Model Encoding

SKMW30**F** – **12**

- 12 → Output voltage (3.3/5/12/15Vdc，±12/±15Vdc)
- F → Input voltage (F: 9~36Vdc，G: 18~75Vdc)
- 30 → Rated wattage
- S → Series name { S:Single output / D:Dual output

Distribuída no Brasil pela LRI | vendas@lri.com.br | 51 2129-3000

MODEL SELECTION TABLE

ORDER NO.	INPUT			OUTPUT		EFFICIENCY (TYP.)	CAPACITOR LOAD (MAX.)
	INPUT VOLTAGE (RANGE)	INPUT CURRENT		OUTPUT VOLTAGE	OUTPUT CURRENT		
		NO LOAD	FULL LOAD				
SKMW30F-03	24V (9 ~ 36V)	10mA	1172mA	3.3V	0~7500mA	88%	7500μF
SKMW30F-05		10mA	1400mA	5V	0~6000mA	90%	6000μF
SKMW30F-12		10mA	1404mA	12V	0~2500mA	89%	2500μF
SKMW30F-15		10mA	1404mA	15V	0~2000mA	89%	2000μF
DKMW30F-12		10mA	1425mA	±12V	±0 ~ 1250mA	87%	*1250μF
DKMW30F-15		10mA	1425mA	±15V	±0 ~1000mA	88%	*1000μF
SKMW30G-03	48V (18 ~ 75V)	8mA	590mA	3.3V	0~7500mA	88%	7500μF
SKMW30G-05		8mA	700mA	5V	0~6000mA	90%	6000μF
SKMW30G-12		8mA	700mA	12V	0~2500mA	89%	2500μF
SKMW30G-15		8mA	702mA	15V	0~2000mA	89%	2000μF
DKMW30G-12		8mA	710mA	±12V	±0 ~ 1250mA	88%	*1250μF
DKMW30G-15		8mA	702mA	±15V	±0 ~1000mA	89%	*1000μF

* For each output

Mean Well Brasil

LRI Distribuída no Brasil pela LRI | vendas@lri.com.br | 51 2129-3000

SPECIFICATION				
INPUT	VOLTAGE RANGE	F: 9~36Vdc , G: 18~75Vdc		
	SURGE VOLTAGE (100ms max.)	24Vin models : 50Vdc, 48Vin models : 100Vdc		
	FILTER	Pi type		
	PROTECTION	Fuse recommended. 24Vin models: 6A delay time Type, 48Vin models: 3A delay time Type		
	INTERNAL POWER DISSIPATION	500mW		
OUTPUT	VOLTAGE ACCURACY	±1.5%		
	RATED POWER	30W		
	RIPPLE & NOISE Note.2	3.3/5Vout models: 75mVp-p, other models:100mVp-p		
	LINE REGULATION Note.3	±0.2%		
	LOAD REGULATION Note.4	Single output models: ±0.2%, Dual output models:±1%		
	SWITCHING FREQUENCY (Typ.)	3.3/5Vout models: 270KHz, other models: 330KHz		
	EXTERNAL TRIM ADJ. RANGE (Typ.)	±10% (Single output model only)		
PROTECTION	SHORT CIRCUIT	Protection type : Continuous, automatic recovery		
	OVERLOAD	110 ~ 170% rated output power		
		Protection type : Recovers automatically after fault condition is removed		
	OVER VOLTAGE	Protection type : Clamp by diode		
	OVER TEMPERATURE	Shut down o/p voltage, recovers automatically after temperature goes down		
	UNDER VOLTAGE LOCKOUT	Start-up voltage	24Vin (F-type): 8.8Vdc, 48Vin (G-type): 17Vdc	
		Shutdown voltage	24Vin (F-type): 8Vdc, 48Vin (G-type): 16Vdc	
FUNCTION	REMOTE CONTROL	Power ON: R.C. ~ -Vin >3.5~75Vdc or open circuit ; Power OFF: R.C. ~ -Vin <1.2Vdc or short		
ENVIRONMENT	COOLING	Free-air convection		
	WORKING TEMP.	-40 ~ +85℃ (Refer to "Derating Curve")		
	CASE TEMPERATURE	+105℃ max.		
	WORKING HUMIDITY	20% ~ 90% RH non-condensing		
	STORAGE TEMP., HUMIDITY	-55 ~ +125℃, 10 ~ 95% RH non-condensing		
	TEMP. COEFFICIENT	0.03% / ℃ (0 ~ 60℃)		
	SOLDERING TEMPERATURE	1.5mm from case of 1 ~ 3sec./260℃ max.		
	VIBRATION	10 ~ 500Hz, 2G 10min./1cycle, period for 60min. each along X, Y, Z axes		
SAFETY & EMC (Note.5)	SAFETY STANDARDS	EAC TP TC 020/2011 (EAC TP TC 004 for 48Vin type only) approved		
	WITHSTAND VOLTAGE	I/P-O/P:1.5KVDC		
	ISOLATION RESISTANCE	I/P-O/P:100M Ohms / 500VDC / 25℃/ 70% RH		
	ISOLATION CAPACITANCE (Typ.)	1500pF		
	EMC EMISSION	**Parameter**	**Standard**	**Test Level / Note**
		Conducted	BS EN/EN55032(CISPR32)	N/A
		Radiated	BS EN/EN55032(CISPR32)	Class A
	EMC IMMUNITY	**Parameter**	**Standard**	**Test Level / Note**
		ESD	BS EN/EN61000-4-2	Level 2, ±8KV air, ±4KV contact
		Radiated Susceptibility	BS EN/EN61000-4-3	Level 2, 3V/m
		EFT/Burest	BS EN/EN61000-4-4	Level 1, 0.5KV
		Surge	BS EN/EN61000-4-5	Level 1, 0.5KV Line-Line
		Conducted	BS EN/EN61000-4-6	Level 2, 3V(e.m.f.)
		Magnetic Field	BS EN/EN61000-4-8	Level 2, 3A/m
OTHERS	MTBF	3.3/5Vout models: 860Khrs, Other models: 1170Khrs MIL-HDBK-217F(25℃)		
	DIMENSION (L*W*H)	25.4*25.4*10.2mm (1*1*0.4 inch)		
	CASE MATERIAL	Black coated copper with non-conductive base		
	PACKING	19.2g ; 12pcs/per tube, 600pcs/50 tube/per carton		

NOTE

1.All parameters are specified at normal input(F:24Vdc, G:48Vdc), rated load, 25℃ 70% RH ambient.
2.Ripple & noise are measured at 20MHz by using a 12" twisted pair terminated with a 0.1μf & 47μf capacitor.
3.Line regulation is measured from low line to high line at rated load.
4.Load regulation is measured from 0% to 100% rated load.
5.The final equipment must be re-confirm that it still meet EMC directives. For guidance on how to perform these EMC tests, please refer to "EMI testing of component power supplies."(as available on http://www.meanwell.com)
※ Product Liability Disclaimer : For detailed information, please refer to https://www.meanwell.com/serviceDisclaimer.aspx

LRI Distribuída no Brasil pela LRI | vendas@lri.com.br | 51 2129-3000

■ External Output Trimming

In order to trim the voltage up or down one needs to connect the trim resistor either between the trim pin and -Vo for trim-up and between trim pin and +Vo for trim-down. The output voltage trim range is ±10%. This is shown in Figures 1 and 2:

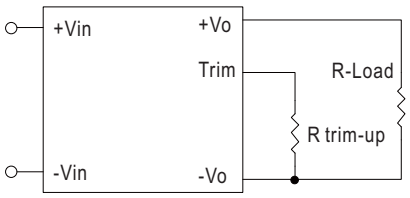

Figure 1. Trim-up Voltage Setup

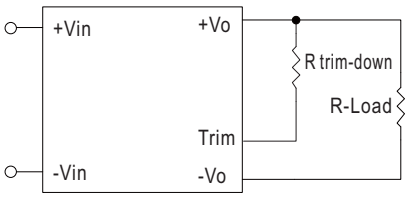

Figure 2. Trim-down Voltage Setup

1. The value of Rtrim-up defined as:

$$R_{trim-up} = \left(\frac{V_r \times R1 \times (R2 + R3)}{(V_o - V_{o,nom}) \times R2}\right) - Rt\ (K\Omega)$$

Where

$R_{trim-up}$ is the external resistor in Kohm.

$V_{o,nom}$ is the nominal output voltage.

V_o is the desired output voltage.

R1, Rt, R2, R3 and Vr are internal to the unit and are defined in Table 1.

Table 1 – Trim up and Trim down Resistor Values

Model Number	Output Voltage(V)	R1 (KΩ)	R2 (KΩ)	R3 (KΩ)	Rt (KΩ)	Vr (V)
SKMW30F-03 SKMW30G-03	3.3	2.74	1.8	0.27	9.1	1.24
SKMW30F-05 SKMW30G-05	5.0	2.32	2.32	0	8.2	2.5
SKMW30F-12 SKMW30G-12	12.0	6.8	2.4	2.32	22	2.5
SKMW30F-15 SKMW30G-15	15.0	8.06	2.4	3.9	27	2.5

For example, to trim-up the output voltage of 5.0V module (SKMW30F-05) by 10% to 5.5V, R trim-up is calculated as follows:

$V_o - V_{o,nom} = 5.5 - 5.0 = 0.5V$

R1 = 2.32 KΩ

R2 = 2.32 KΩ

R3 = 0 KΩ

Rt = 8.2 KΩ

Vr = 2.5V

$$R_{trim-up} = \left(\frac{2.5 \times 2.32 \times (2.32+0)}{0.5 \times 2.32}\right) - 8.2 = 3.4(K\Omega)$$

2. The value of Rtrim-down defined as:

$$R_{trim-down} = R1 \times \left(\frac{V_r \times R1}{(V_{o,nom} - V_o) \times R2} - 1\right) - Rt\ (K\Omega)$$

Where

$R_{trim-down}$ is the external resistor in Kohm.

$V_{o,nom}$ is the nominal output voltage.

V_o is the desired output voltage.

R1, Rt, R2, R3 and Vr are internal to the unit and are defined in Table 1.

For example, to trim-down the output voltage of 5.0V module (SKMW30F-05) by 10% to 4.5V, R trim-down is calculated as follows:

$V_{o,nom} - V_o = 5.0 - 4.5 = 0.5V$

R1 = 2.32 KΩ

R2 = 2.32 KΩ

R3 = 0 KΩ

Rt = 8.2 KΩ

Vr = 2.5V

$$R_{trim-down} = 2.32 \times \left(\frac{2.5 \times 2.32}{0.5 \times 2.32} - 1\right) - 8.2 = 1.08\ (K\Omega)$$

LRI Distribuída no Brasil pela LRI | vendas@lri.com.br | 51 2129-3000

■ Mechanical Specification

- All dimensions in mm(inch)
- Tolerance:x.x±1mm(x.xx±0.25")
- Pin size is 1±0.1mm (0.04"±0.004")

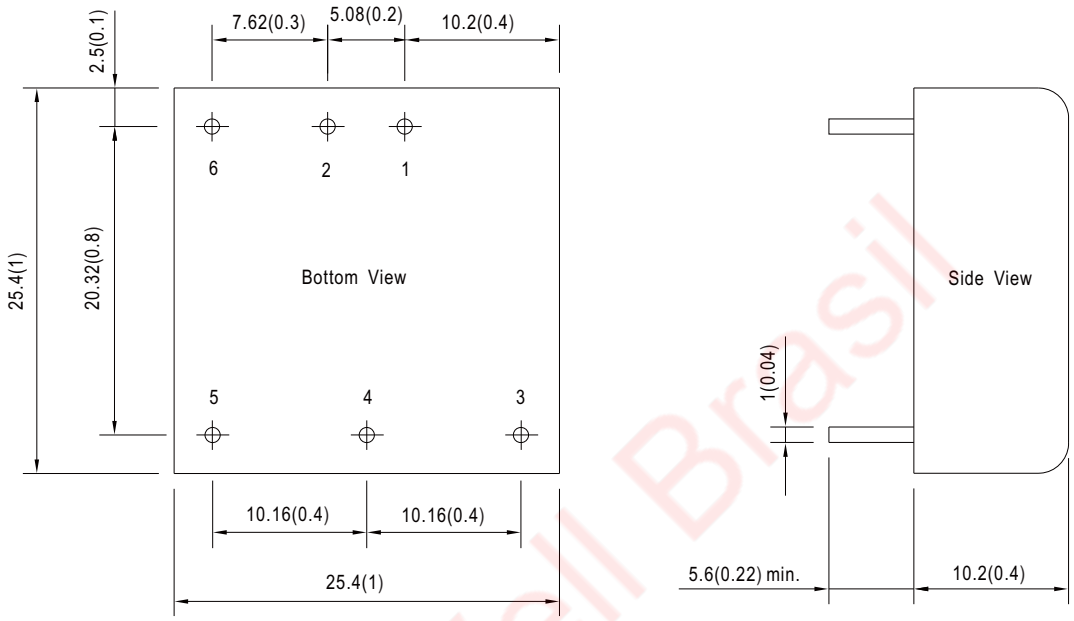

■ Plug Assignment

Pin-Out		
Pin No.	SKMW30 (Single output)	DKMW30 (Dual output)
1	+Vin	+Vin
2	-Vin	-Vin
3	+Vout	+Vout
4	Trim	Common
5	-Vout	-Vout
6	R.C.	R.C.

■ Derating Curve

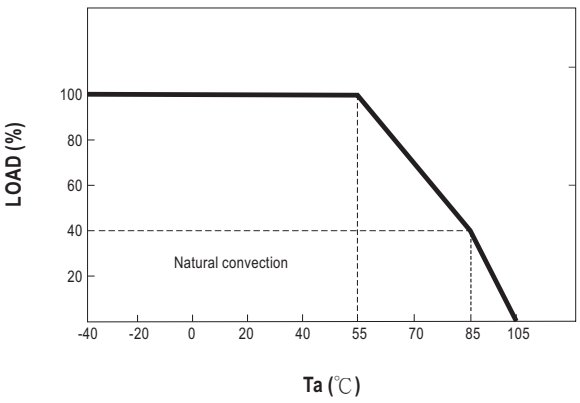

Mean Well Brasil

LRI Distribuída no Brasil pela LRI | vendas@lri.com.br | 51 2129-3000

■ Packing

Standard Tube Packing	MPQ Per Tube (PCS)	One Tube G.W.	Max. Q'TY/ Carton(PCS)	One Carton G.W.
Unit : mm 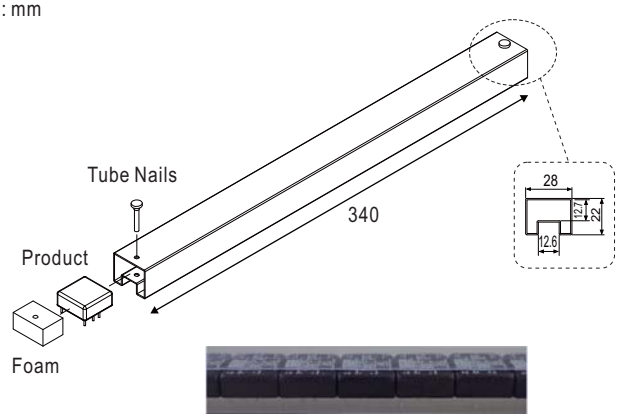 Tube pattern 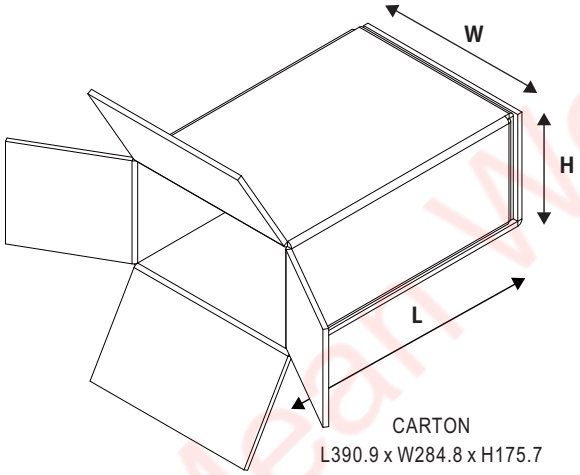 CARTON L390.9 x W284.8 x H175.7	12	266.4g	600	15.32Kg

■ Installation Manual

Please refer to : http://www.meanwell.com/manual.html

Mean Well Brasil

LRI Distribuída no Brasil pela LRI | vendas@lri.com.br | 51 2129-3000