

■ Features :

- 2:1 wide input range
- 4:1 wide input range(option)
- 1500VDC I/O isolation
- 3000VDC I/O isolation(option)
- Built-in EMI filter
- Protections: Short circuit / Overload
- Cooling by free air convection
- Six-sided shield metal case
- 100% burn-in test
- Low cost / High reliability
- Approvals: FCC / EAC / CE / UKCA
- 2 years warranty

■ GTIN CODE

MW Search: https://www.meanwell.com/serviceGTIN.aspx

SPECIFICATION

ORDER NO.		SKE15A-05	SKE15B-05	SKE15C-05	SKE15A-12	SKE15B-12	SKE15C-12	SKE15A-15	SKE15B-15	SKE15C-15	SKE15A-24	SKE15B-24	SKE15C-24
OUTPUT	DC VOLTAGE	5V			12V			15V			24V		
	CURRENT RANGE	300 ~ 3000mA			125 ~ 1250mA			100 ~ 1000mA			62.5 ~ 625mA		
	RATED POWER	15W											
	RIPPLE & NOISE (max.) Note.2	50mVp-p			60mVp-p			60mVp-p			80mVp-p		
	LINE REGULATION Note.3	±0.3%											
	LOAD REGULATION Note.4	±0.5%											
	VOLTAGE ACCURACY	±2.0%											
	SWITCHING FREQUENCY	150KHz min.											
INPUT	VOLTAGE RANGE	A: 9 ~ 18VDC	B: 18 ~ 36VDC	C: 36 ~ 72VDC									
	EFFICIENCY (Typ.)	79%	79%	80%	80%	82%	82%	80%	83%	83%	82%	83%	84%
	DC CURRENT	Full load	A: 1700mA	B: 800mA	C: 400mA								
		No load	A: 40mA	B: 20mA	C: 10mA								
	FILTER	Pi network											
	PROTECTION	Fuse recommended											
PROTECTION (Note. 5)	OVER CURRENT	160% ~ 250% rated output power											
		Protection type : Hiccup mode, recovers automatically after fault condition is removed											
	SHORT CIRCUIT	All output equipped with short circuit											
		Protection type : Hiccup mode, recovers automatically after fault condition is removed											
ENVIRONMENT	WORKING TEMP.	-25 ~ +71℃ (Refer to "Derating Curve")											
	WORKING HUMIDITY	20% ~ 90% RH non-condensing											
	STORAGE TEMP., HUMIDITY	-25 ~ +105℃, 10 ~ 95% RH											
	TEMP. COEFFICIENT	±0.03% / ℃ (0 ~ 50℃)											
	VIBRATION	10 ~ 500Hz, 2G 10min./1cycle, period for 60min. each along X, Y, Z axes											
SAFETY & EMC	SAFETY STANDARDS	EAC TP TC 020/2011 approved											
	WITHSTAND VOLTAGE	I/P-O/P:1.5KVDC											
	ISOLATION RESISTANCE	I/P-O/P: 100M Ohms / 500VDC / 25℃/ 70% RH											
	EMC EMISSION	Compliance to BS EN/EN55032 Class A, FCC part 15 Class A, EAC TP TC 020											
	EMC IMMUNITY	Compliance to BS EN/EN61000-4-2,3,4,5,6,8, light industry level, criteria A, EAC TP TC 020											
OTHERS	MTBF	300Khrs min. MIL-HDBK-217F(25℃)											
	DIMENSION	50.8*50.8*11.0 mm or 2"*2"*0.43" inch (L*W*H)											
	PACKING	60g ; 5pcs/per tube, 200pcs/40 tube/per carton											

■ Mechanical Specification

Unit:mm(inch)

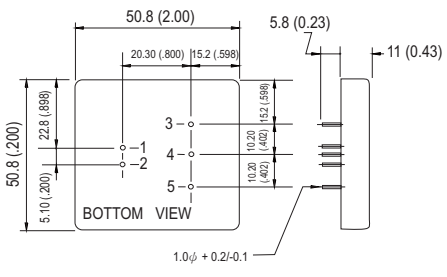

■ Pin Configuration

Pin No.	Output
1	+Vin
2	-Vin
3	+Vout
4	No Pin
5	-Vout

■ Derating Curve

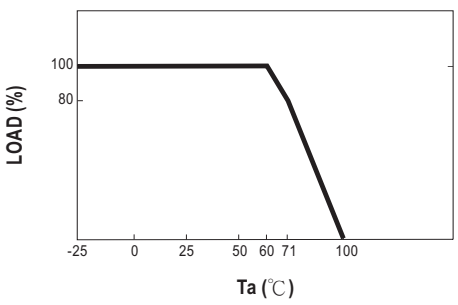

NOTE

1.All parameters are specified at normal input, rated load, 25℃ 70% RH ambient.
2.Ripple & noise are measured at 20MHz by using a 12" twisted pair terminated with a 0.1uf & 47uf capacitor.
3.Line regulation is measured from low line to high line at rated load.
4.Load regulation is measured from 10% to 100% rated load.
5.Please prevent the converter from operating in overload or short circuit condition for more than 30 seconds.
※ Product Liability Disclaimer : For detailed information, please refer to https://www.meanwell.com/serviceDisclaimer.aspx

LRI Distribuída no Brasil pela LRI | vendas@lri.com.br | 51 2129-3000

■ Packing

Standard Tube Packing	MPQ Per Tube (PCS)	One Tube G.W.	Max. Q'TY/ Carton(PCS)	One Carton G.W.
Unit : mm 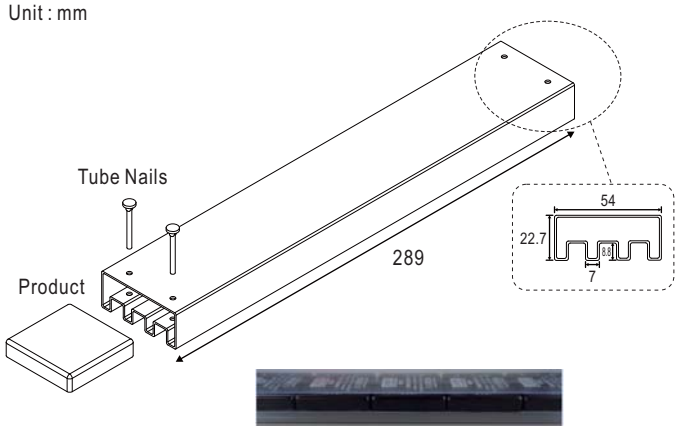 Tube pattern 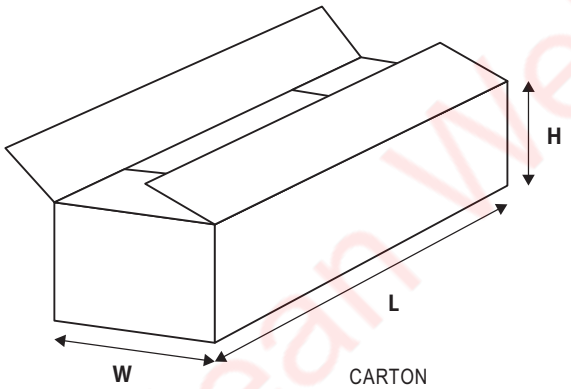 CARTON L600 x W230 x H220	5	360g	200	15.2Kg

■ Installation Manual

Please refer to : http://www.meanwell.com/manual.html

Mean Well Brasil

Distribuída no Brasil pela LRI | vendas@lri.com.br | 51 2129-3000