

Features :

- 2:1 wide input range
- High efficiency up to 92%
- 1500VDC I/O isolation
- Built-in EMI filter
- Built-in remote ON / OFF control
- Built-in remote sense
- Trimming ouput ±10%
- Protections: Short circuit / Overload / Over voltage
- Cooling by free air convection
- Six-sided shield metal case
- 100% burn-in test
- Low cost / High reliability
- Output 3.3V/9V available
- Approvals: FCC / EAC / CE / UKCA
- 2 years warranty

GTIN CODE

MW Search: https://www.meanwell.com/serviceGTIN.aspx

SPECIFICATION

ORDER NO.		SKA40A-05	SKA40B-05	SKA40C-05	SKA40A-12	SKA40B-12	SKA40C-12	SKA40A-15	SKA40B-15	SKA40C-15
OUTPUT	DC VOLTAGE	5V			12V			15V		
	CURRENT RANGE	0.7 ~ 7A			0.3 ~ 3.33A			0.26 ~ 2.67A		
	RATED POWER	35W			40W			40W		
	RIPPLE & NOISE (max.) Note.2	60mVp-p			80mVp-p			100mVp-p		
	LINE REGULATION Note.3	±0.5%								
	LOAD REGULATION Note.4	±0.5%								
	VOLTAGE ACCURACY	±2.0%								
	SWITCHING FREQUENCY	200KHz min.								
	EXTERNAL CAPACITANCE LOAD (max.)	1000uF								
	EXTERNAL TRIM Adj. RANGE(Typ.)	±10%								
INPUT	VOLTAGE RANGE	A: 9 ~ 18VDC B: 18 ~ 36VDC C: 36 ~ 75VDC								
	EFFICIENCY (Typ.)	91%	92%	91%	90%	90%	88.5%	90%	90.5%	90%
	DC CURRENT	Full load	A: 3850mA B: 1900mA C: 1000mA							
		No load	A: 150mA B: 100mA C: 65mA							
	FILTER	Pi network								
	REMOTE CONTROL	Power ON : R.C ~ -Vin > 2.5V ~ 75VDC or open circuit ; Power OFF : R.C ~ -Vin < 0.5VDC or short								
	PROTECTION	Fuse recommended								
PROTECTION (Note. 5)	OVER CURRENT	110% ~ 180% rated output power								
		Protection type : Hiccup mode, recovers automatically after fault condition is removed								
	SHORT CIRCUIT	All output equipped with short circuit								
		Protection type : Hiccup mode, recovers automatically after fault condition is removed								
	OVER VOLTAGE	5Vo : 7V ~ 8.95V ; 12Vo : 15V ~ 19.2V ; 15Vo : 18V ~ 23.3V Protection type : Clamp by TVS diode								
ENVIRONMENT	WORKING TEMP.	-40 ~ +80℃ (Refer to "Derating Curve")								
	WORKING HUMIDITY	20% ~ 90% RH non-condensing								
	STORAGE TEMP., HUMIDITY	-55 ~ +105℃, 10 ~ 95% RH								
	TEMP. COEFFICIENT	±0.03% / ℃ (0 ~ 50℃)								
	VIBRATION	10 ~ 500Hz, 2G 10min./1cycle, period for 60min. each along X, Y, Z axes								
SAFETY & EMC	SAFETY STANDARDS	EAC TP TC 020/2011 (EAC TP TC 004 for 48Vin type only) approved								
	WITHSTAND VOLTAGE	I/P-O/P:1.5KVDC								
	ISOLATION RESISTANCE	I/P-O/P: 100M Ohms / 500VDC / 25℃ / 70% RH								
	EMC EMISSION	Compliance to BS EN/EN55032 Class A, FCC part 15 Class A, EAC TP TC 020								
	EMC IMMUNITY	Compliance to BS EN/EN61000-4-2,3,4,5,6,8, light industry level, criteria A, EAC TP TC 020								
OTHERS	DIMENSION	50.8*50.8*11.0 mm or 2"*2"*0.43" inch (L*W*H)								
	PACKING	50g ; 5pcs/per tube, 200pcs/40 tube/per carton								

Mechanical Specification

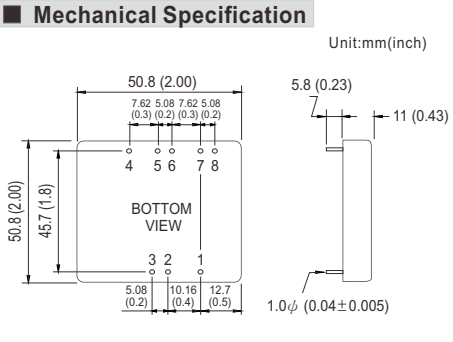

Pin Configuration

Pin No.	Output	Pin No.	Output
1	R.C	5	+R.S
2	-Vin	6	+Vout
3	+Vin	7	-Vout
4	-R.S	8	TRIM

External Output Trimming

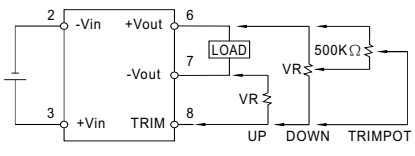

Derating Curve

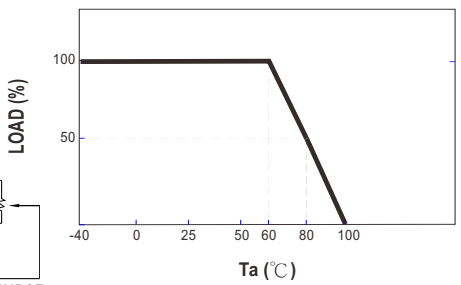

NOTE	
	1.All parameters are specified at normal input, rated load, 25℃ 70% RH ambient. 2.Ripple & noise are measured at 20MHz by using a 12" twisted pair terminated with a 0.1uf & 47uf capacitor. 3.Line regulation is measured from low line to high line at rated load. 4.Load regulation is measured from 10% to 100% rated load. 5.Please prevent the converter from operating in overload or short circuit condition for more than 30 seconds. ※ Product Liability Disclaimer : For detailed information, please refer to https://www.meanwell.com/serviceDisclaimer.aspx

LRI Distribuída no Brasil pela LRI | vendas@lri.com.br | 51 2129-3000

■ Packing

Standard Tube Packing	MPQ Per Tube (PCS)	One Tube G.W.	Max. Q'TY/ Carton(PCS)	One Carton G.W.
Unit : mm 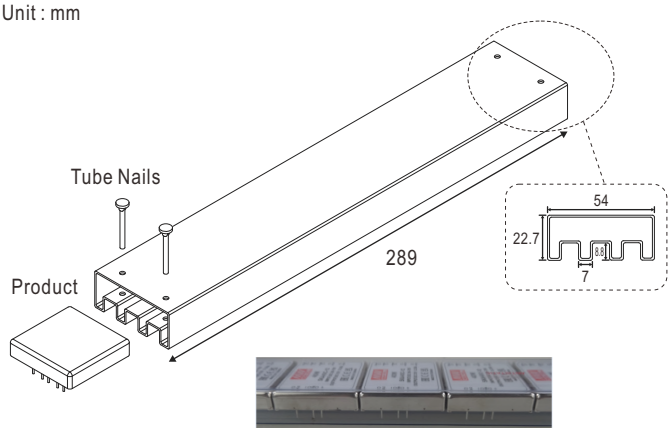 Tube pattern 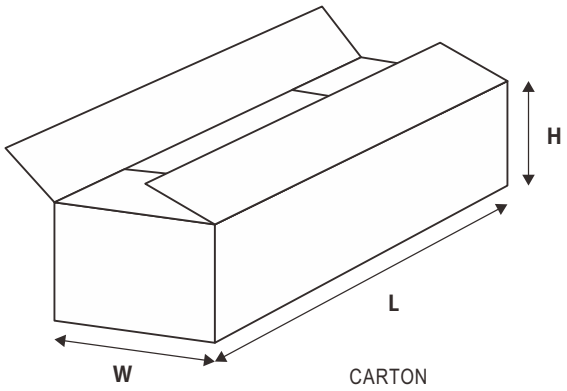 CARTON L620 x W230 x H230	5	320g	200	13.6Kg

■ Installation Manual

Please refer to : http://www.meanwell.com/manual.html

Distribuída no Brasil pela LRI | vendas@lri.com.br | 51 2129-3000