6W DIP Package DC-DC Regulated Converter **SCWN06 & DCWN06 series**

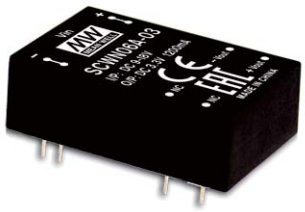

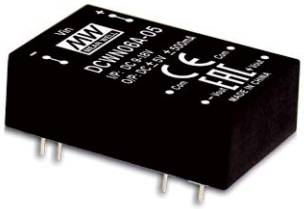

Features

- DIP24 package with industry standard pinout
- 2:1 wide input range
- Operating temperature range -40 ~ +90℃
- No minimum load required
- Comply to BS EN/EN55032 radiated Class A without additional components
- High efficiency up to 87%
- Protections: Short circuit (Continuous) / Overload / Input under voltage
- 3KVDC I/O isolation
- 3 years warranty

Applications

- Telecom/datacom system
- Wireless network
- Industrial control facility
- Instrument
- Analyzer
- Detector
- Data switch

GTIN CODE

MW Search: https://www.meanwell.com/serviceGTIN.aspx

Description

SCWN06 and DCWN06 series are 6W isolated and regulated module type DC-DC converter with DIP24 package. It features international standard pins, a high efficiency up to 87%, wide working temperature range -40~+90℃, 3KVDC I/P-O/P isolation voltage, Compliance to BS EN/EN55032 radiated Class A without additional components, continuous-mode short circuit protection, etc. The additional components, models account for different input voltage 9~18V, 18~36V and 36~72V 2:1 wide input range, and various output voltage, 3.3V/5V/12V/15V for single output and ±5V/±12V/±15V for dual outputs, which are suitable for all kinds of systems, Such as industrial control, telecommunication field, distributed power architecture, and so on.

Model Encoding

S CWN06 A – 12

- Output voltage (3.3/5/12/15Vdc，±5/±12/±15Vdc)
- Input voltage (A: 9~18Vdc，B: 18~36Vdc，C: 36~72Vdc)
- Rated wattage
- Series name { S:Single output / D:Dual output

Distribuída no Brasil pela LRI | vendas@lri.com.br | 51 2129-3000

MODEL SELECTION TABLE

ORDER NO.	INPUT			OUTPUT		EFFICIENCY (TYP.)	CAPACITOR LOAD (MAX.)
	INPUT VOLTAGE (RANGE)	INPUT CURRENT		OUTPUT VOLTAGE	OUTPUT CURRENT		
		NO LOAD	FULL LOAD				
SCWN06A-03	Normal 12V (9 ~ 18V)	5mA	429mA	3.3V	1200mA	77%	4700μF
SCWN06A-05		5mA	514mA	5V	1000mA	81%	4700μF
SCWN06A-12		10mA	600mA	12V	500mA	83%	4700μF
SCWN06A-15		15mA	600mA	15V	400mA	84%	4700μF
DCWN06A-05		10mA	514mA	±5V	±0 ~ 500mA	80%	*2200μF
DCWN06A-12		12mA	600mA	±12V	±0 ~ 250mA	83%	*2200μF
DCWN06A-15		18mA	600mA	±15V	±0 ~ 200mA	84%	*2200μF
SCWN06B-03	Normal 24V (18 ~ 36V)	4mA	209mA	3.3V	1200mA	79%	4700μF
SCWN06B-05		5mA	251mA	5V	1000mA	82%	4700μF
SCWN06B-12		7mA	291mA	12V	500mA	86%	4700μF
SCWN06B-15		8mA	291mA	15V	400mA	86%	4700μF
DCWN06B-05		8mA	254mA	±5V	±0 ~ 500mA	82%	*2200μF
DCWN06B-12		10mA	291mA	±12V	±0 ~ 250mA	86%	*2200μF
DCWN06B-15		10mA	291mA	±15V	±0 ~ 200mA	85%	*2200μF
SCWN06C-03	Normal 48V (36 ~ 72V)	2mA	104mA	3.3V	1200mA	79%	4700μF
SCWN06C-05		3mA	126mA	5V	1000mA	83%	4700μF
SCWN06C-12		6mA	148mA	12V	500mA	86%	4700μF
SCWN06C-15		5mA	148mA	15V	400mA	86%	4700μF
DCWN06C-05		8mA	126mA	±5V	±0 ~ 500mA	83%	*2200μF
DCWN06C-12		8mA	148mA	±12V	±0 ~ 250mA	85%	*2200μF
DCWN06C-15		10mA	144mA	±15V	±0 ~ 200mA	87%	*2200μF

* For each output

Mean Well Brasil

LRI Distribuída no Brasil pela LRI | vendas@lri.com.br | 51 2129-3000

SPECIFICATION				
INPUT	VOLTAGE RANGE	A: 9~18Vdc , B: 18~36Vdc , C: 36~72Vdc		
	SURGE VOLTAGE (100ms max.)	12Vin models : 25Vdc ; 24Vin models : 50Vdc ; 48Vin models : 100Vdc		
	FILTER	Pi type		
	PROTECTION (Typ.)	Fuse recommended. 12Vin models: 1.6A Fast-Acting Type, 24Vin models: 1A Fast-Acting Type, 48Vin models: 0.5A Fast-Acting Type		
	INTERNAL POWER DISSIPATION	500mW		
OUTPUT	VOLTAGE ACCURACY	±1.5%		
	RATED POWER	6W		
	RIPPLE & NOISE Note.2	50mVp-p		
	LINE REGULATION Note.3	±0.5%		
	LOAD REGULATION Note.4	Single output models: ±0.5%, Dual output models: ±1%		
	SWITCHING FREQUENCY (Min.)	100KHz		
PROTECTION	SHORT CIRCUIT	Protection type : Continuous, automatic recovery		
	OVERLOAD	120 ~ 250% rated output power		
		Protection type : Recovers automatically after fault condition is removed		
	UNDER VOLTAGE LOCKOUT	Start-up voltage	12Vin: 8.8Vdc, 24Vin: 17Vdc, 48Vin: 34Vdc	
		Shutdown voltage	12Vin: 8Vdc, 24Vin: 16Vdc, 48Vin: 31Vdc	
ENVIRONMENT	COOLING	Free-air convection		
	WORKING TEMP.	-40 ~ +90℃ (Refer to "Derating Curve")		
	CASE TEMPERATURE	+100℃ max.		
	WORKING HUMIDITY	20% ~ 90% RH non-condensing		
	STORAGE TEMP., HUMIDITY	-40 ~ +100℃, 10 ~ 95% RH non-condensing		
	TEMP. COEFFICIENT	0.03% / ℃ (0 ~ 90℃)		
	SOLDERING TEMPERATURE	1.5mm from case of 1 ~ 3sec./260℃ max.		
	VIBRATION	10 ~ 500Hz, 2G 10min./1cycle, period for 60min. each along X, Y, Z axes		
SAFETY & EMC (Note.5)	SAFETY STANDARDS	EAC TP TC 020/2011 approved		
	WITHSTAND VOLTAGE	I/P-O/P:3KVDC		
	ISOLATION RESISTANCE	I/P-O/P:100M Ohms / 500VDC / 25℃/ 70% RH		
	ISOLATION CAPACITANCE (Typ.)	250pF		
	EMC EMISSION	**Parameter**	**Standard**	**Test Level / Note**
		Conducted	BS EN/EN55032(CISPR32)	N/A
		Radiated	BS EN/EN55032(CISPR32)	Class A
	EMC IMMUNITY	**Parameter**	**Standard**	**Test Level / Note**
		ESD	BS EN/EN61000-4-2	Level 2, ±8KV air, ±4KV contact
		Radiated Susceptibility	BS EN/EN61000-4-3	Level 2, 3V/m
		EFT/Burest	BS EN/EN61000-4-4	Level 1, 0.5KV
		Surge	BS EN/EN61000-4-5	Level 1, 0.5KV Line-Line
		Conducted	BS EN/EN61000-4-6	Level 2, 3V(e.m.f.)
		Magnetic Field	BS EN/EN61000-4-8	Level 2, 3A/m
OTHERS	MTBF (Typ.)	1800Khrs MIL-HDBK-217F(25℃)		
	DIMENSION (L*W*H)	31.8*20.3*10.2mm (1.25*0.8*0.4 inch)		
	CASE MATERIAL	Non-Conductive black plastic (UL 94V-0 rated)		
	PACKING	12.4g ; 10pcs/per tube, 600pcs/60 tube/per carton		

NOTE

1.All parameters are specified at normal input(A:12Vdc, B:24Vdc, C:48Vdc), rated load, 25℃ 70% RH ambient.
2.Ripple & noise are measured at 20MHz by using a 12" twisted pair terminated with a 0.1μf & 47μf capacitor.
3.Line regulation is measured from low line to high line at rated load.
4.Load regulation is measured from 10% to 100% rated load for SCWN06, 25% to 100% rated load for DCWN06.
5.The final equipment must be re-confirm that it still meet EMC directives. For guidance on how to perform these EMC tests, please refer to “EMI testing of component power supplies.”(as available on http://www.meanwell.com)
※ Product Liability Disclaimer ： For detailed information, please refer to https://www.meanwell.com/serviceDisclaimer.aspx

Mean Well Brasil

LRI Distribuída no Brasil pela LRI | vendas@lri.com.br | 51 2129-3000

■ Mechanical Specification

- All dimensions in mm(inch)
- Tolerance:x.x±0.5mm(x.xx±0.02")
  x.xx±0.25mm(x.xxx±0.010")
- Pin size is:0.5±0.05mm (0.02"±0.002")

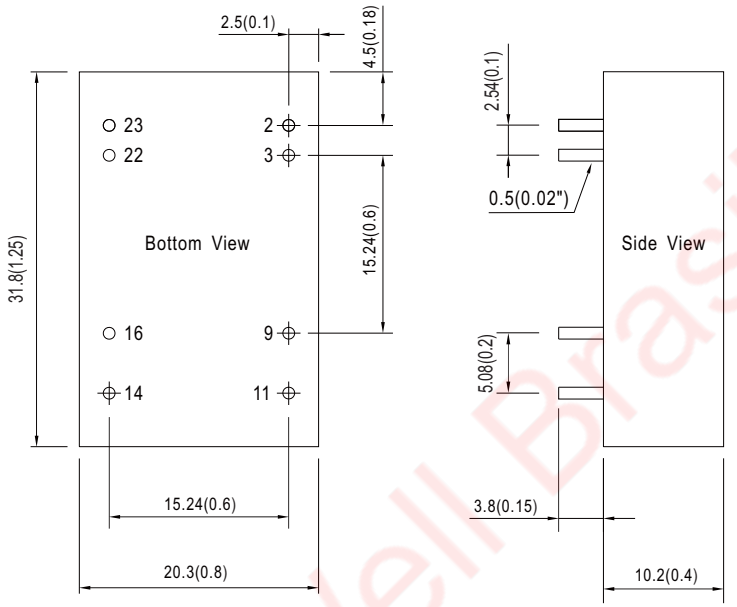

■ Plug Assignment

Pin-Out		
Pin No.	SCWN06 (Single output)	DCWN06 (Dual output)
2,3	-Vin	-Vin
9	N.C.	Common
11	N.C.	-Vout
14	+Vout	+Vout
16	-Vout	Common
22,23	+Vin	+Vin

■ Derating Curve

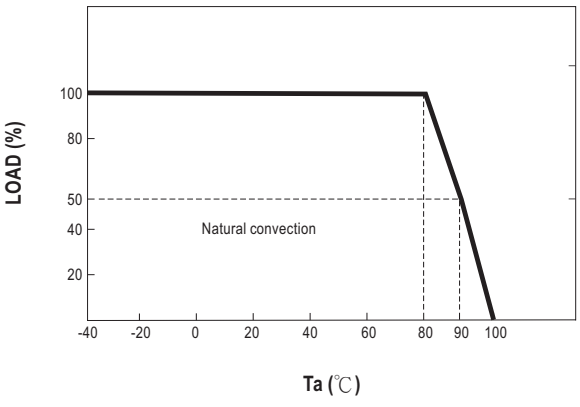

Mean Well Brasil

LRI Distribuída no Brasil pela LRI | vendas@lri.com.br | 51 2129-3000

■ Packing

Standard Tube Packing	MPQ Per Tube (PCS)	One Tube G.W.	Max. Q'TY/ Carton(PCS)	One Carton G.W.
Unit : mm 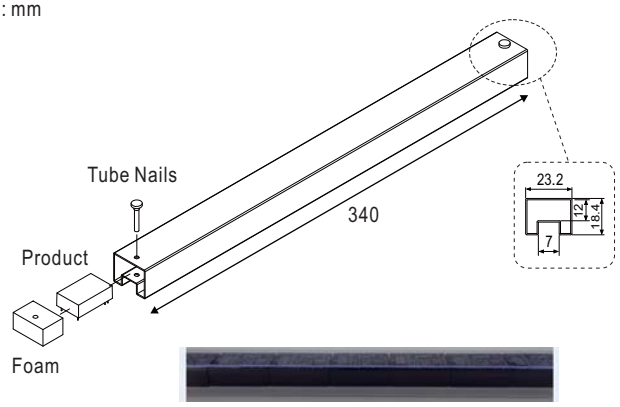 Tube pattern 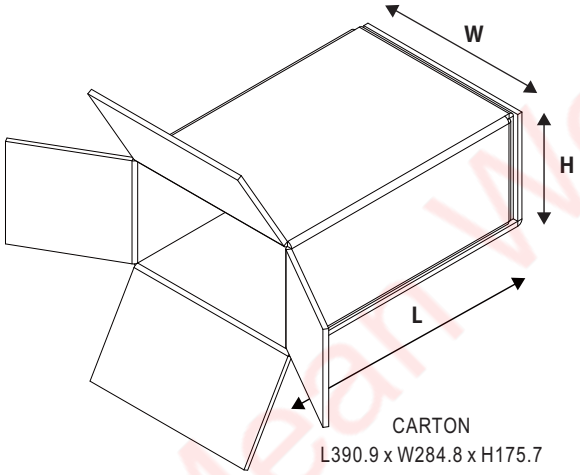 CARTON L390.9 x W284.8 x H175.7	10	148g	600	10.88Kg

■ Installation Manual

Please refer to : http://www.meanwell.com/manual.html

Mean Well Brasil

LRI Distribuída no Brasil pela LRI | vendas@lri.com.br | 51 2129-3000