2400W Parallel (N+1) With PFC Function

SCP-2K4 series



Features :

- AC input 180~260VAC, 3 ϕ 3 wire
- AC 220V, 1 ϕ or 380V, 3 ϕ 4 wire(option)
- PF> 0.98@ 230VAC
- Protections: Short circuit / Overload / Over voltage / Over temperature
- Built-in remote sense function, remote ON-OFF control
- Built-in power good signal output
- Built-in parallel operation function(N+1)
- Can adjust from 20~100% output voltage by external control 1-5V
- Forced air cooling by built-in DC fan
- Case coating with paint
- 3 years warranty

SPECIFICATION

ORDER NO.		SCP-2K4-09	SCP-2K4-12	SCP-2K4-15	SCP-2K4-18	SCP-2K4-24	SCP-2K4-36	SCP-2K4-48	SCP-2K4-60
OUTPUT	SAFETY MODEL NO.	2K4S-P009	2K4S-P012	2K4S-P015	2K4S-P018	2K4S-P024	2K4S-P036	2K4S-P048	2K4S-P060
	DC VOLTAGE	9V	12V	15V	18V	24V	36V	48V	60V
	RATED CURRENT	266A	200A	160A	133.3A	100A	66.6A	50A	40A
	CURRENT RANGE	0 ~ 266A	0 ~ 200A	0 ~ 160A	0 ~ 133.3A	0 ~ 100A	0 ~ 66.6A	0 ~ 50A	0 ~ 40A
	RATED POWER	2394W	2400W	2400W	2399W	2400W	2397W	2400W	2400W
	RIPPLE & NOISE (max.) Note.2	90mVp-p	120mVp-p	150mVp-p	150mVp-p	150mVp-p	200mVp-p	200mVp-p	200mVp-p
	VOLTAGE ADJ. RANGE	3.0% Typical adjustment by potentiometer			20% ~ 100% adjustment by 1 ~ 5VDC external control				
	VOLTAGE TOLERANCE Note.3	2.0%	1.0%	1.0%	1.0%	1.0%	1.0%	1.0%	1.0%
	LINE REGULATION	0.5%	0.5%	0.5%	0.5%	0.5%	0.5%	0.5%	0.5%
	LOAD REGULATION	1.5%	0.5%	0.5%	0.5%	0.5%	0.5%	0.5%	0.5%
	SETUP, RISE, HOLD UP TIME	800ms, 400ms, 12ms at full load							
INPUT	VOLTAGE RANGE	180 ~ 260VAC 3 ϕ 3 wire (other system available)							
	FREQUENCY RANGE	47 ~ 63Hz							
	POWER FACTOR	>0.98 / 230VAC							
	EFFICIENCY (Typ.)	83%	84%	85%	86%	88%	88%	89%	89%
	AC CURRENT	15A / 230VAC							
	INRUSH CURRENT (max.)	60A / 230VAC							
	LEAKAGE CURRENT(max.)	3.5mA / 240VAC							
PROTECTION	OVERLOAD Note. 4	110 ~ 140% rated output power							
		Protection type : Current limiting, delay shut down o/p voltage, re-power on to recover							
	OVER VOLTAGE	110 ~ 135% Follow to output set up point							
		Protection type : Shut down o/p voltage, re-power on to recover							
	OVER TEMPERATURE	>100℃ / measure by heat sink, near transformer							
		Protection type : Shut down o/p voltage, recovers automatically after temperature goes down							
ENVIRONMENT	WORKING TEMP.	-20 ~ +65℃ (Refer to output load derating curve)							
	WORKING HUMIDITY	20 ~ 90% RH non-condensing							
	STORAGE TEMP., HUMIDITY	-20 ~ +85℃, 10 ~ 95% RH							
	TEMP. COEFFICIENT	0.04% / ℃ (0 ~ 50℃)							
	VIBRATION	10 ~ 200Hz, 2G 10min./1cycle, 60min. each along X, Y, Z axes							
SAFETY & EMC (Note. 5)	SAFETY STANDARDS	UL60950, TUV EN60950-1 Approved							
	WITHSTAND VOLTAGE	I/P-O/P:3KVAC I/P-FG:1.5KVAC O/P-FG:0.5KVAC							
	ISOLATION RESISTANCE	I/P-O/P, I/P-FG, OP/FG:100M Ohms / 500VDC / 25℃/ 70% RH							
	EMI CONDUCTION & RADIATION	Compliance to EN55022 (CISPR22) class A							
	HARMONIC CURRENT	Compliance to EN61000-3-2,3							
	EMS IMMUNITY	Compliance to EN61000-4-2,3,4,5,6,8,11, Light industry level, criteria A							
OTHERS	POWER GOOD SIGNAL	Open collector of NPN transistor							
	SPECIAL FUNCTION	DC Voltage Adj., Remote sensing, remote control, parallel operation(refer to control terminal instruction manual)							
	COOLING	By fan, >20% load or >50℃ fan on							
	MTBF	24.9K hrs min. MIL-HDBK-217F(25℃)							
	DIMENSION	350*212*124mm (L*W*H)							
	PACKING	9.0kg ; 1pcs / 10kg / CARTON							

NOTE

1. All parameters NOT specially mentioned are measured at 230VAC input, rated load and 25℃ of ambient temperature.
2. Ripple & noise are measured at 20MHz of bandwidth by using a 12" twisted pair-wire terminated with a 0.1uf & 47uf parallel capacitor.
3. Tolerance : includes set up tolerance, line regulation and load regulation.
4. Current limiting 3 times(1.5s,3.0s,5.0s)Then intelligent auto recovery before shut down
5. The power supply is considered a component which will be installed into a final equipment. The final equipment must be re-confirmed that it still meets EMC directives.

LRI Distribuída no Brasil pela LRI | vendas@lri.com.br | 51 2129-3000

■ Mechanical Specification

Unit:mm

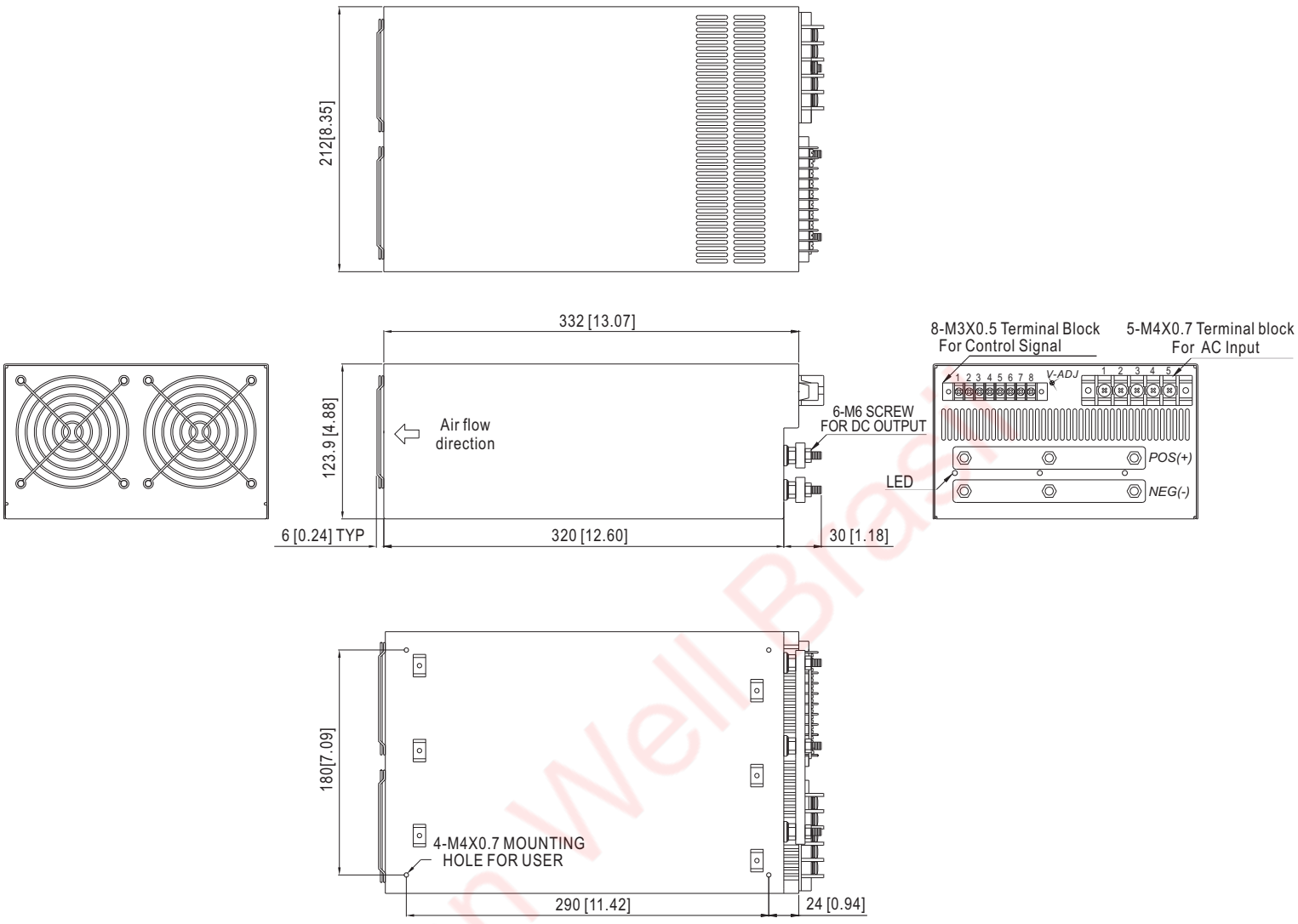

Control Terminal Pin. No. Assignment :

Pin No.	Assignment	Pin No.	Assignment
1	VS+	5	PG
2	VS-	6	PAR
3	VCI	7	GND
4	VCO	8	INH

AC Input Terminal Pin. No. Assignment

Pin No.	Assignment	Pin No.	Assignment
1	FG ⏚	4	S
2	N	5	R
3	T		

■ Derating Curve

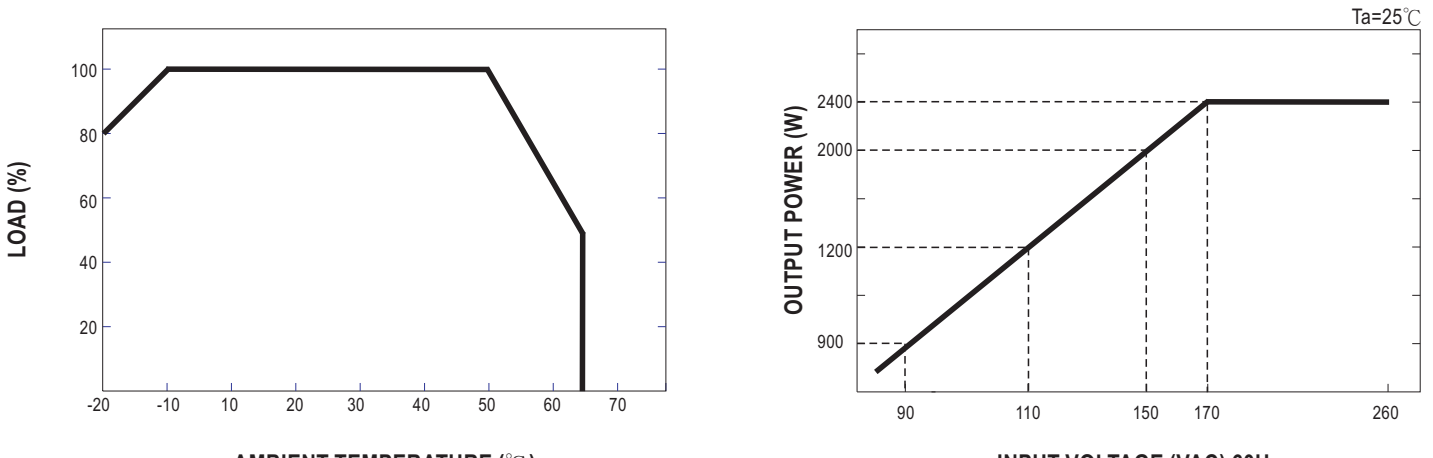

LRI Distribuída no Brasil pela LRI | vendas@lri.com.br | 51 2129-3000

■ Control terminal instruction manual

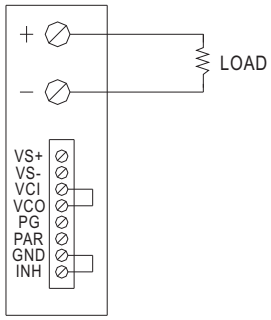

USING INTERNAL VOLTAGE CONTROL

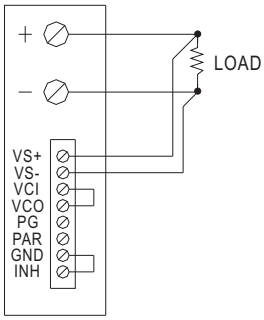

REMOTE SENSING

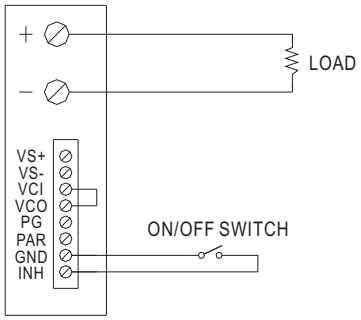

ON/OFF CONTROL BY SWITCH

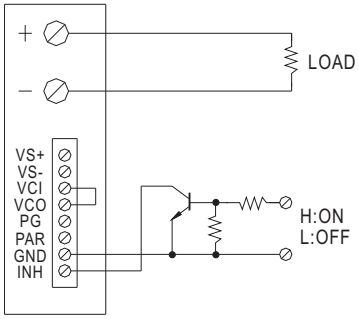

ON/OFF CONTROL BY TRANSISTOR

GOOD : LED OFF
FAIL : LED ON

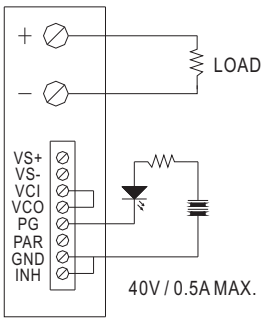

POWER GOOD SIGNAL

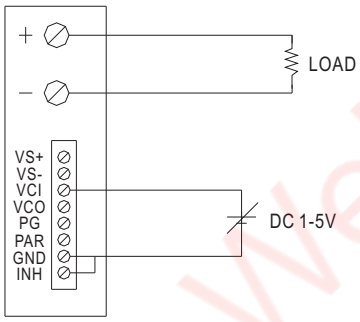

OUTPUT VOLTAGE ADJUST WITH DC 1-5V

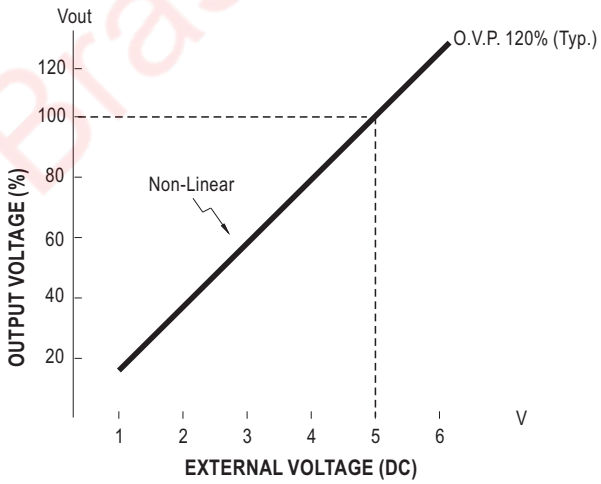

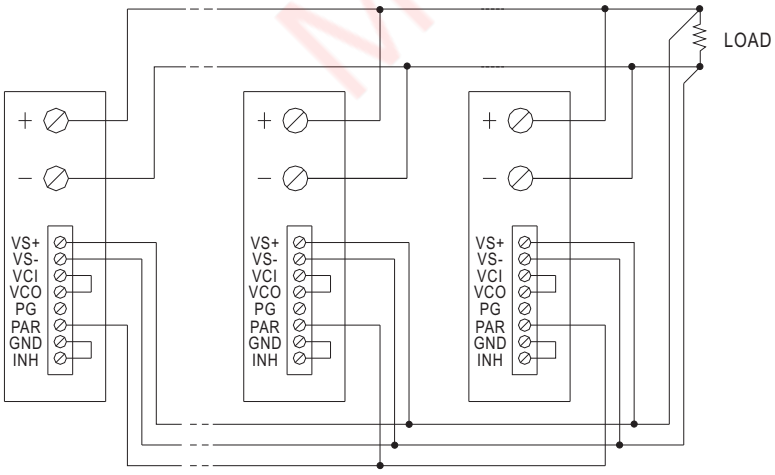

PARALLEL OPERATION WITH REMOTE SENSING

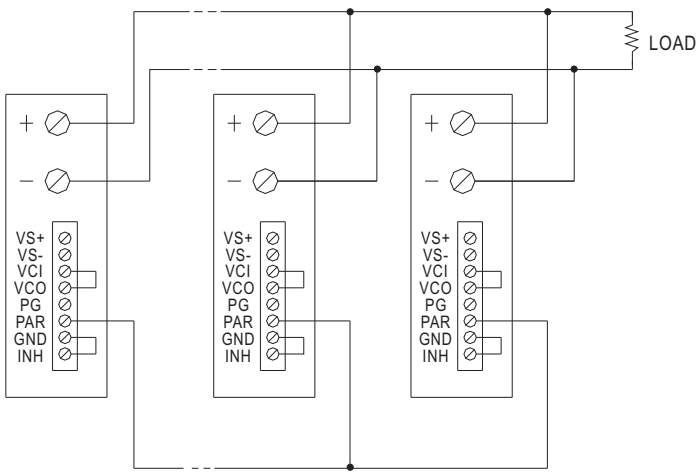

PARALLEL OPERATION WITHOUT REMOTE SENSING

Mean Well Brasil

LRI Distribuída no Brasil pela LRI | vendas@lri.com.br | 51 2129-3000

■ FIG. A: 3 ϕ 3W 220VAC SYSTEM (STANDARD MODEL FOR STOCK)

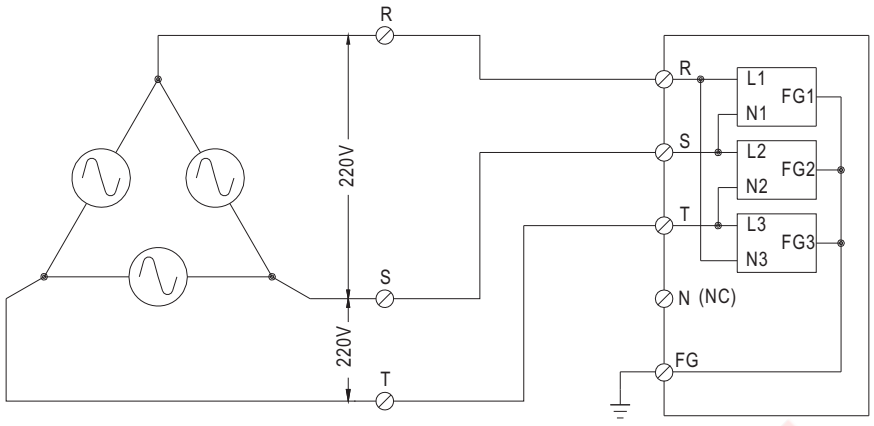

■ FIG. B: 1 ϕ 220VAC SYSTEM

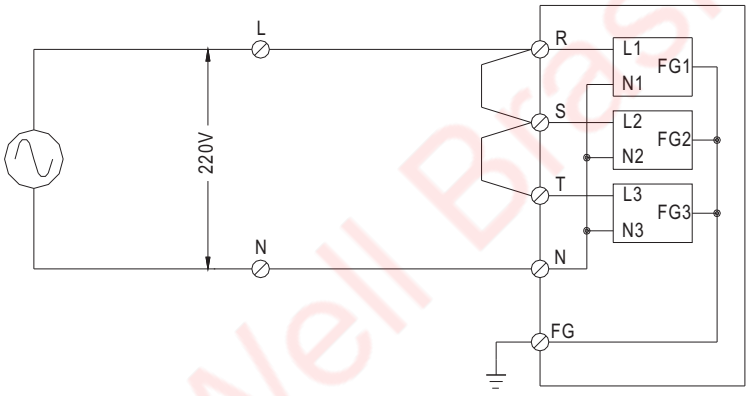

■ FIG. C: 3 ϕ 4W 220/380VAC SYSTEM

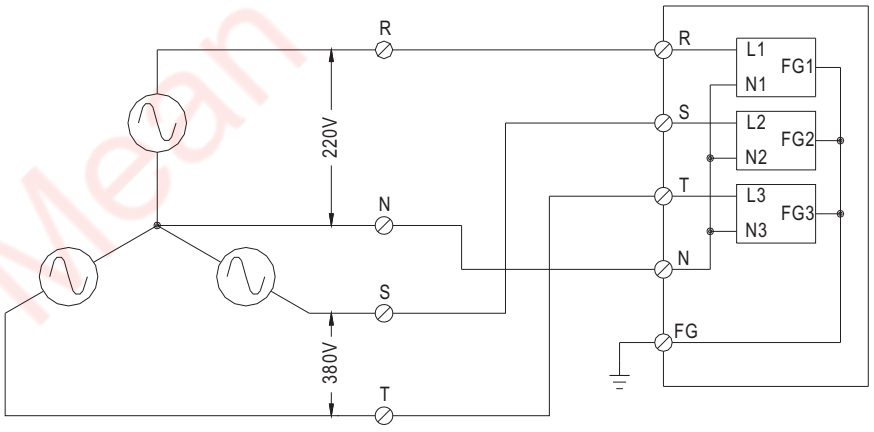

■ FIG. D: 3 ϕ 4W 190/110VAC SYSTEM

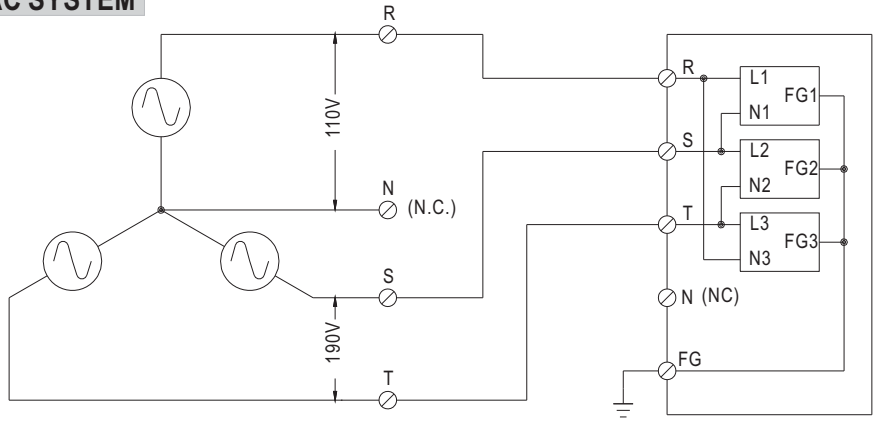

Mean Well Brasil

LRI Distribuída no Brasil pela LRI | vendas@lri.com.br | 51 2129-3000