15W Single Output Switching Power Supply

S-15 series



Features :

- AC input range selected by switch
- Protections:Short circuit/Over load
- Cooling by free air convection
- 100% full load burn-in
- Fixed switching frequency at 37KHz
- Lost cost
- High reliability
- 1 year warranty

SPECIFICATION

MODEL		S-15-5	S-15-12	S-15-24
OUTPUT	DC VOLTAGE	5V	12V	24V
	RATED CURRENT	3A	1.3A	0.7A
	CURRENT RANGE	0 ~ 3A	0 ~ 1.3A	0 ~ 0.7A
	RATED POWER	15W	15.6W	16.8W
	RIPPLE & NOISE (max.) Note.2	50mVp-p	50mVp-p	100mVp-p
	VOLTAGE ADJ. RANGE	4.75 ~ 5.5V	10.8 ~ 13.2V	21.6 ~ 26.4V
	VOLTAGE TOLERANCE Note.3	±2.0%	±1.0%	±1.0%
	LINE REGULATION	±0.5%	±0.5%	±0.5%
	LOAD REGULATION	±1.0%	±0.5%	±0.5%
	SETUP, RISE, HOLD TIME	200ms, 100ms, 30ms at full load		
INPUT	VOLTAGE RANGE	85 ~ 132VAC / 170 ~ 264VAC selected by switch	240 ~ 370VDC	
	FREQUENCY RANGE	47 ~ 63Hz		
	EFFICIENCY(Typ.)	65%	68%	72%
	AC CURRENT	0.5A/115VAC 0.25A/230VAC		
	INRUSH CURRENT(max.)	COLD START 15A/115VAC 30A/230VAC		
	LEAKAGE CURRENT	<0.5mA / 240VAC		
PROTECTION	OVER LOAD	105 ~ 150% rated output power		
		Protection type : Fold back current limiting, recovers automatically after fault condition is removed		
ENVIRONMENT	WORKING TEMP.	-10 ~ +60℃ (Refer to output load derating curve)		
	WORKING HUMIDITY	20 ~ 90% RH non-condensing		
	STORAGE TEMP., HUMIDITY	-20 ~ +85℃, 10 ~ 95% RH non-condensing		
	TEMP. COEFFICIENT	±0.02%/℃ (0 ~ 50℃)		
	VIBRATION	10 ~ 500Hz, 2G 10min./1cycle, period for 60min. each along X, Y, Z axes		
SAFETY & EMC	SAFETY STANDARDS	Design refer to UL1012		
	WITHSTAND VOLTAGE	I/P-O/P:1.5KVAC I/P-FG:1.5KVAC O/P-FG:0.5KVAC		
	ISOLATION RESISTANCE	I/P-O/P, I/P-FG, O/P-FG:100M Ohms/500VDC		
	EMI CONDUCTION & RADIATION	Design refer to FCC Part15 J Conduction Class B		
OTHERS	MTBF	522.1K hrs min. MIL-HDBK-217F (25℃)		
	DIMENSION	99*97*36mm (L*W*H)		
	PACKING	0.31Kg; 45pcs/15Kg/0.9CUFT		
NOTE	1. All parameters NOT specially mentioned are measured at 230VAC input, rated load and 25℃ of ambient temperature. 2. Ripple & noise are measured at 20MHz of bandwidth by using a 12" twisted pair-wire terminated with a 0.1uf & 47uf parallel capacitor. 3. Tolerance : includes set up tolerance, line regulation and load regulation.			

www.lri.com.br

LRI Distribuída no Brasil pela LRI | vendas@lri.com.br | 51 2129-3000

■ Mechanical Specification

Case No. 905 Unit:mm

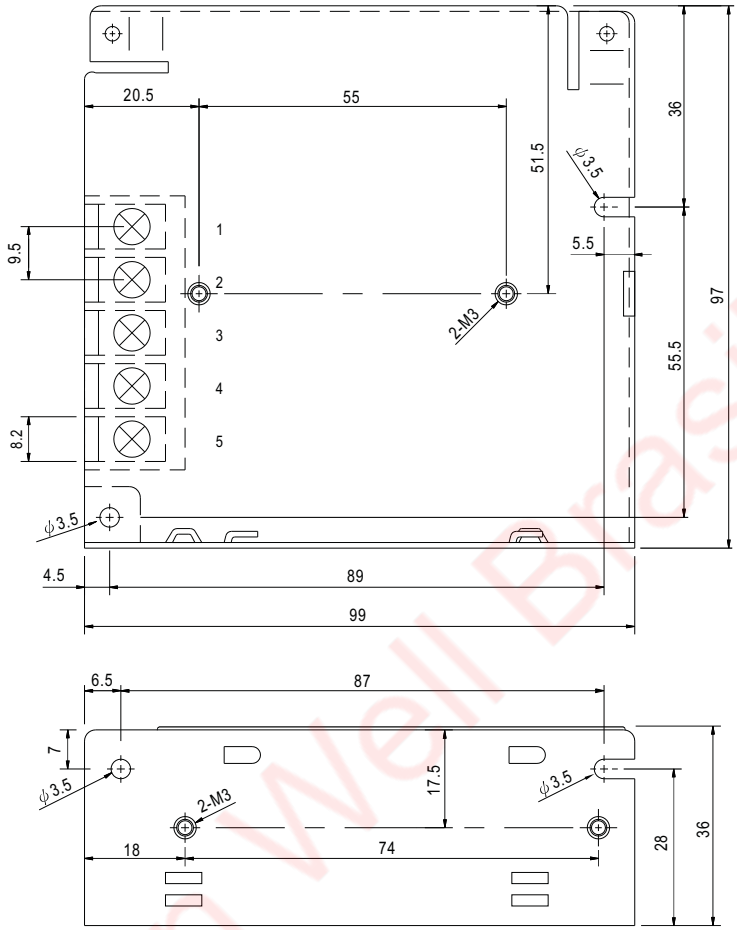

Terminal Pin. No Assignment

Pin No.	Assignment	Pin No.	Assignment
1	DC OUTPUT +V	3	FG ⏚
2	DC OUTPUT -V	4,5	AC INPUT

■ Derating Curve

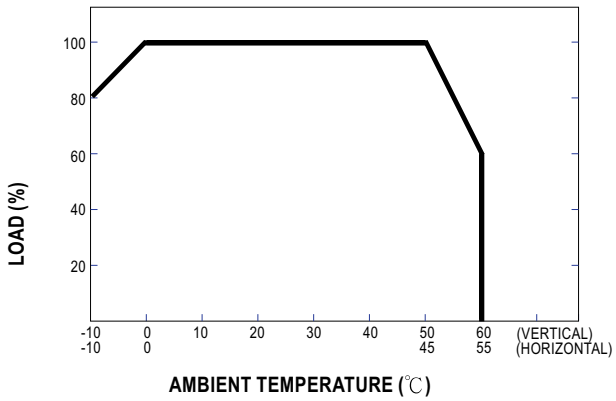

■ Static Characteristics (24V)

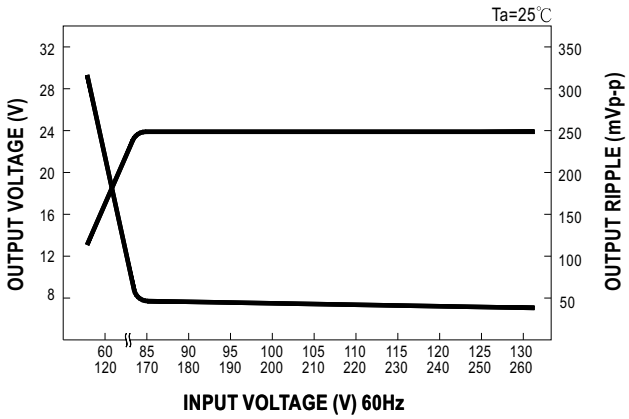

Mean Well Brasil

LRI Distribuída no Brasil pela LRI | vendas@lri.com.br | 51 2129-3000