40W 2"x1" Package Reliable Railway DC-DC Converter RSDW40 & RDDW40 series





Railway Automate Industrial Security Network Telecom

Features

- Compliance with EN50155 railway standard
- 2"x1" compact size with low profile(10.5mm)
- 4:1 wide input range
- Wide operating temperature range -40 ~ +90℃
- No minimum load required
- Full encapsulated
- Protections: Short circuit (Continuous) / Overload / Over voltage / Over temperature / Input under voltage lock-out
- 1.6KVDC,3KVDC I/O isolation by models
- Remote ON/OFF control
- 3 years warranty

Applications

- Bus, tram, metro or railway system
- Telecom/datacom system
- Wireless network
- Industrial control facility
- Instrument
- Analyzer
- Highly vibrating, heavily dusty, exteremely low or high temperature harsh environment

GTIN CODE

MW Search: https://www.meanwell.com/serviceGTIN.aspx

Description

RSDW40 and RDDW40 series are 40W module type DC-DC reliable railway converter with 2"x1" package. It features international standard pins, a high efficiency up to 92%, wide working temperature range -40~+90℃, 1.6KVDC(F/G models)/3KVDC(H models) I/P-O/P isolation voltage, compliance with EN50155 railway standard, continuous-mode short circuit protection, etc. The models account for different input voltage 9~36V, 18~75V and 40~160V 4:1 wide input range, and various output voltage, 3.3V/5V/12V/15V/24V/48V for single output and ± 12V/± 15V for dual outputs, which are suitable for railway, trams, buses and also can be used in the harsh environment with high vibration, high dust, extremely low or high temperature, etc.

Model Encoding

RSDW40H-12

- 12 — Output voltage (3.3/5/12/15/24/48Vdc，±12/±15Vdc)
- H — Input voltage (F: 9~36Vdc，G: 18~75Vdc，H: 40~160Vdc)
- 40 — Rated wattage
- RSDW — Series name { S:Single output / D:Dual output

Distribuída no Brasil pela LRI | vendas@lri.com.br | 51 2129-3000

MODEL SELECTION TABLE

ORDER NO.	INPUT			OUTPUT		EFFICIENCY (Typ.)	CAPACITOR LOAD (MAX.)
	INPUT VOLTAGE (RANGE)	INPUT CURRENT		OUTPUT VOLTAGE	OUTPUT CURRENT		
		NO LOAD	FULL LOAD				
RSDW40F-03	Normal 24V (9 ~ 36V)	15mA	1.6A	3.3V	10A	89%	26600μF
RSDW40F-05		15mA	1.9A	5V	8A	89%	20000μF
RSDW40F-12		15mA	1.9A	12V	3.333A	92%	3900μF
RSDW40F-15		15mA	1.9A	15V	2.666A	92%	2600μF
RDDW40F-12		15mA	1.95A	±12V	0 ~ ±1.666A	89%	*2600μF
RDDW40F-15		15mA	1.95A	±15V	0 ~ ±1.333A	90%	*1600μF
RSDW40G-03	Normal 48V (18 ~ 75V)	15mA	0.85A	3.3V	10A	88%	26600μF
RSDW40G-05		15mA	1A	5V	8A	90%	20000μF
RSDW40G-12		15mA	1A	12V	3.333A	92%	3900μF
RSDW40G-15		15mA	1A	15V	2.666A	92%	2600μF
RDDW40G-12		15mA	1A	±12V	0 ~ ±1.666A	90%	*2600μF
RDDW40G-15		15mA	1A	±15V	0 ~ ±1.333A	90%	*1600μF
RSDW40H-05	Normal 110V (40 ~ 160V)	10mA	0.5A	5V	8A	88.5%	20000μF
RSDW40H-12		10mA	0.5A	12V	3.333A	89%	3900μF
RSDW40H-24		10mA	0.5A	24V	1.667A	89%	1300μF
RSDW40H-48		10mA	0.5A	48V	0.833A	89%	220μF

* For each output

Mean Well Brasil

LRI Distribuída no Brasil pela LRI | vendas@lri.com.br | 51 2129-3000

SPECIFICATION				
INPUT	VOLTAGE RANGE	F: 9~36Vdc , G: 18~75Vdc , H: 40~160Vdc		
	SURGE VOLTAGE (100ms max.)	24Vin models : 50Vdc, 48Vin models : 100Vdc, 110Vin models : 200Vdc		
	FILTER	Pi type		
	PROTECTION	Fuse recommended. 24Vin models: 8A delay time Type, 48Vin models: 4A delay time Type, 110Vin models: 2A delay time Type		
OUTPUT	VOLTAGE ACCURACY	±1%		
	RATED POWER	40W		
	RIPPLE & NOISE Note.2	Single output models: 3.3Vo~15Vo: 100mVp-p, 24Vo~48Vo: 150mVp-p Dual output models: 125mVp-p		
	LINE REGULATION Note.3	Single output models: ±0.2%, Dual output models: ±0.5%		
	LOAD REGULATION Note.4	Single output models: ±0.5%, Dual output models: ±1%		
	CROSS REGULATION	±5% @ 25%~100% load for 24Vin/48Vin models		
	SWITCHING FREQUENCY (Typ.)	250KHz		
	EXTERNAL TRIM ADJ. RANGE (Typ.)	±10% (Single output model only)		
PROTECTION	SHORT CIRCUIT	Protection type : Continuous, automatic recovery		
	OVERLOAD	125 ~ 210% rated output power		
		Protection type : Recovers automatically after fault condition is removed		
	OVER VOLTAGE	Protection type : Clamp by diode		
	OVER TEMPERATURE	Tcase temperature 110℃ max.		
	UNDER VOLTAGE LOCKOUT	24Vin: 8Vdc, 48Vin: 16Vdc, 110Vin: 34Vdc		
FUNCTION	REMOTE CONTROL	Power ON: R.C~-Vin >3~12Vdc or open circuit Power OFF: R.C~-Vin <1.2Vdc or short		
ENVIRONMENT	COOLING	Free-air convection		
	WORKING TEMP.	-40 ~ +90℃ (Refer to "Derating Curve")		
	CASE TEMPERATURE	+110℃ max.		
	WORKING HUMIDITY	20% ~ 90% RH non-condensing		
	STORAGE TEMP., HUMIDITY	-55 ~ +125℃, 10 ~ 95% RH non-condensing		
	TEMP. COEFFICIENT	0.05% / ℃ (0 ~ 55℃)		
	SOLDERING TEMPERATURE	1.5mm from case of 1 ~ 3sec./260℃ max.		
	VIBRATION	10 ~ 500Hz, 2G 10min./1cycle, period for 60min. each along X, Y, Z axes		
SAFETY & EMC (Note.5)	SAFETY STANDARDS	EAC TP TC 020/2011(EAC TP TC 004 for 48Vin/110Vin type only) approved		
	WITHSTAND VOLTAGE	24Vin / 48Vin models: I/P-O/P 1.6KVDC, 110Vin models: 3KVDC		
	ISOLATION RESISTANCE	I/P-O/P:1000M Ohms / 500VDC / 25℃/ 70% RH		
	ISOLATION CAPACITANCE (Typ.)	1500pF		
	EMC EMISSION	**Parameter**	**Standard**	**Test Level / Note**
		Conducted	BS EN/EN55032	Class A/B with external components (see page 6~7)
		Radiated	BS EN/EN55032	
	EMC IMMUNITY	**Parameter**	**Standard**	**Test Level / Note**
		ESD	BS EN/EN61000-4-2	Level 2, ±8KV air, ±6KV contact
		EFT/Burest	BS EN/EN61000-4-4	Level 1, ±2KV
		Surge	BS EN/EN61000-4-5	Level 1, ±2KV Line-Line
		Conducted	BS EN/EN61000-4-6	Level 2, 10V(e.m.f.)
		Magnetic field	BS EN/EN61000-4-8	10A/m
	RAILWAY STANDARD	EN50155 / IEC60571 including EN61373 for shock & vibration, EN50121-3-2 for EMC		
OTHERS	MTBF	779Khrs MIL-HDBK-217F(25℃)		
	DIMENSION (L*W*H)	50.8*25.4*10.5mm (2*1*0.413 inch)		
	CASE MATERIAL	Metal Case		
	PACKING	F/G models: 37.6g, H models: 45g ; 18pcs/per tube, 288pcs/16 tube max./carton		
NOTE	1.All parameters are specified at normal input(F:24Vdc, G:48Vdc, H:110Vdc), rated load, 25℃ 70% RH ambient. 2.Ripple & noise are measured at 20MHz by using a 12" twisted pair terminated with a 0.1μf & 47μf capacitor. 3.Line regulation is measured from low line to high line at rated load. 4.Load regulation is measured from 0% to 100% rated load. 5.The final equipment must be re-confirm that it still meet EMC directives. For guidance on how to perform these EMC tests, please refer to "EMI testing of component power supplies."(as available on http://www.meanwell.com) ※ Product Liability Disclaimer : For detailed information, please refer to https://www.meanwell.com/serviceDisclaimer.aspx			

LRI Distribuída no Brasil pela LRI | vendas@lri.com.br | 51 2129-3000

■ External Output Trimming

In order to trim the voltage up or down one needs to connect the trim resistor either between the trim pin and -Vo for trim-up and between trim pin and +Vo for trim-down. The output voltage trim range is ±10%. This is shown in Figures 1 and 2:

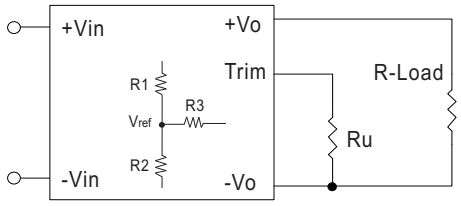

Figure 1. Trim-up Voltage Setup

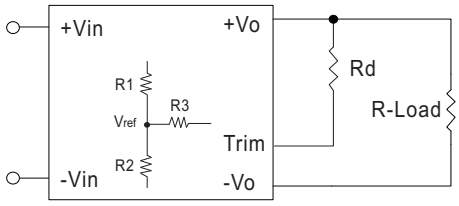

Figure 2. Trim-down Voltage Setup

1. The value of Rtrim-up defined as:

$$R_{trim-up} = \frac{aR2}{R2-a} - R3,\ a = \frac{V_{ref}}{V_o'-V_{ref}} \times R1$$

For example, to trim-up the output voltage of 5.0V module (RSDW40F-05) by 10% to 5.5V, $R_{trim-up}$ is calculated as follows:

V_o' = 5.5V
V_{ref} = 1.24V
R1 = 15.47 KΩ
R2 = 5.1 KΩ
R3 = 33KΩ

$$a = \frac{V_{ref}}{V_o'-V_{ref}} \times R1$$

$$= \frac{1.24}{5.5-1.24} \times 15.47 = 4.503$$

$$R_{trim-up} = \frac{aR2}{R2-a} - R3$$

$$= \frac{4.503 \times 5.1}{5.1-4.503} - 33$$

$$= \frac{22.9653}{0.597} - 33$$

$$= 5.476K\Omega$$

Table 1 – Trim up and Trim down Resistor Values

Model No.	Vout	Vref	R1	R2	R3
RSDW40F	3.3V	1.24V	8.5KΩ	5.1KΩ	27KΩ
	5V	1.24V	15.47KΩ	5.1KΩ	33KΩ
	12V	2.50V	12.62KΩ	3.3KΩ	22KΩ
	15V	2.50V	15.1KΩ	3KΩ	22KΩ
RSDW40G	3.3V	1.24V	8.5KΩ	5.1KΩ	27KΩ
	5V	1.24V	15.47KΩ	5.1KΩ	33KΩ
	12V	2.50V	12.62KΩ	3.3KΩ	22KΩ
	15V	2.50V	15.1KΩ	3KΩ	22KΩ
RSDW40H	5V	1.24V	15.47KΩ	5.1KΩ	30KΩ
	12V	2.50V	38KΩ	10KΩ	68KΩ
	24V	2.50V	86KΩ	10KΩ	76.8KΩ
	48V	2.50V	182KΩ	10KΩ	80.6KΩ

Note:
1. $R_{trim-up}$, $R_{trim-down}$ is mean trim resistor, please check the formula.
2. a & b: user define parameter, no actual meanings.
3. V_o' is target trim voltage.
4. Value for R1, R2, R3 and Vref refer to below table.

2. The value of Rtrim-down defined as:

$$R_{trim-down} = \frac{bR1}{R1-b} - R3,\ b = \frac{V_o'-V_{ref}}{V_{ref}} \times R2$$

For example, to trim-down the output voltage of 5.0V module (RSDW40F-05) by 10% to 4.5V, $R_{trim-down}$ is calculated as follows:

V_o' = 4.5V
V_{ref} = 1.24V
R1 = 15.47 KΩ
R2 = 5.1 KΩ
R3 = 33KΩ

$$b = \frac{V_o'-V_{ref}}{V_{ref}} \times R2$$

$$= \frac{4.5-1.24}{1.24} \times 5.1 = 2.629 \times 5.1 = 13.408$$

$$R_{trim-down} = \frac{bR1}{R1-b} - R3$$

$$= \frac{13.408 \times 15.47}{15.47-13.408} - 33$$

$$= \frac{207.4217}{2.062} - 33$$

$$= 67.592K\Omega$$

Mean Well Brasil

LRI Distribuída no Brasil pela LRI | vendas@lri.com.br | 51 2129-3000

■ Mechanical Specification

- All dimensions in mm(inch)
- Tolerance: x.xx±0.35mm(x.xx±0.013")
- Pin size is:1±0.1mm (0.04"±0.005")

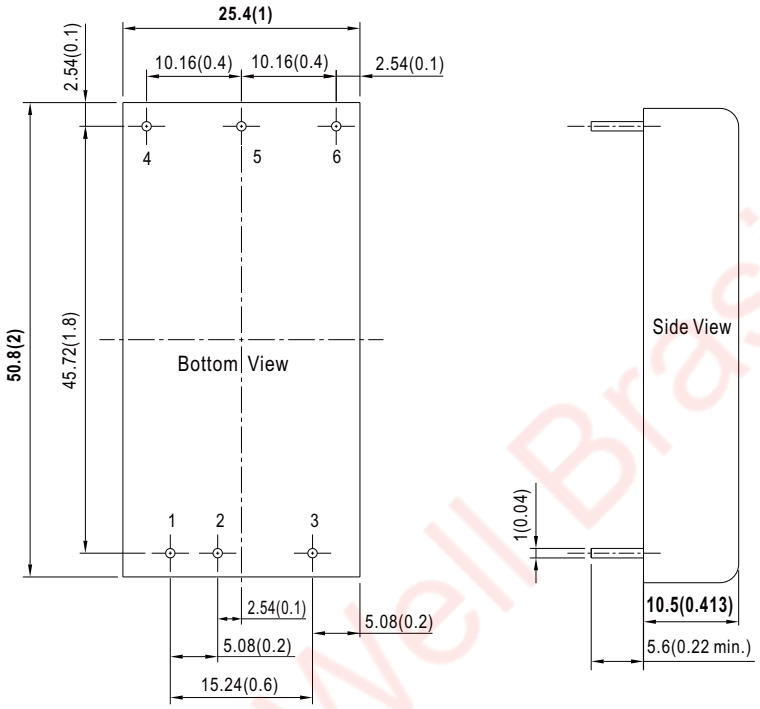

■ Plug Assignment

Pin-Out		
Pin No.	RSDW40 (Single output)	RDDW40 (Dual output)
1	+Vin	+Vin
2	-Vin	-Vin
3	Remote ON/OFF	Remote ON/OFF
4	+Vout	+Vout
5	-Vout	Common
6	Trim	-Vout

Mean Well Brasil

Distribuída no Brasil pela LRI | vendas@lri.com.br | 51 2129-3000

■ Derating Curve

RSDW40F/G/H (Single output models):

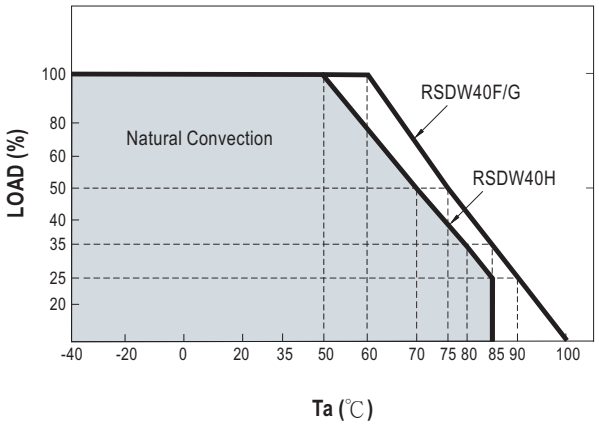

RDDW40F/G (Dual output models):

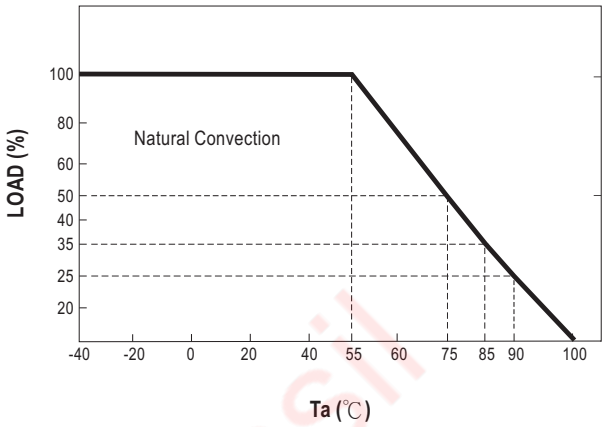

■ EMC Suggestion Circuit

F models(9~36Vin) and G models(18~75Vin):

※Comply to BS EN/EN55032 Class A emission without additional componets are as below:

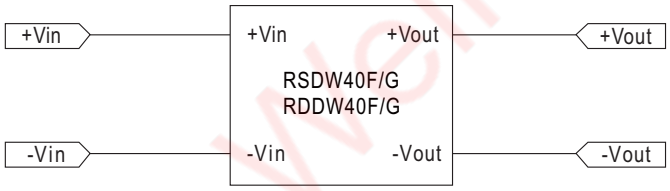

※Required external componets to meet BS EN/EN55032 Class B emission are as below:

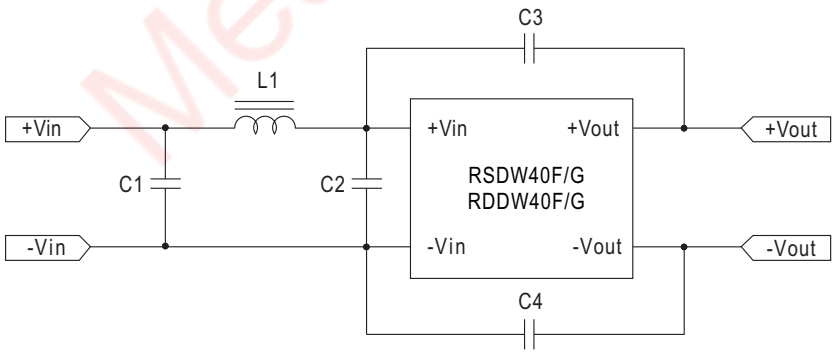

Model No.	C1	L1	C2	C3	C4
RSDW40F-03/05/12/15 RDDW40F-12/15	10μF	1.5μH	10μF	2200pF	2200pF
RSDW40G-03/05/12/15 RDDW40G-12/15	4.7μF	3.3μH	4.7μF	2200pF	2200pF

LRI Distribuída no Brasil pela LRI | vendas@lri.com.br | 51 2129-3000

H models(40~160Vin):

※Required external componets to meet BS EN/EN55032 Class A emission are as below:

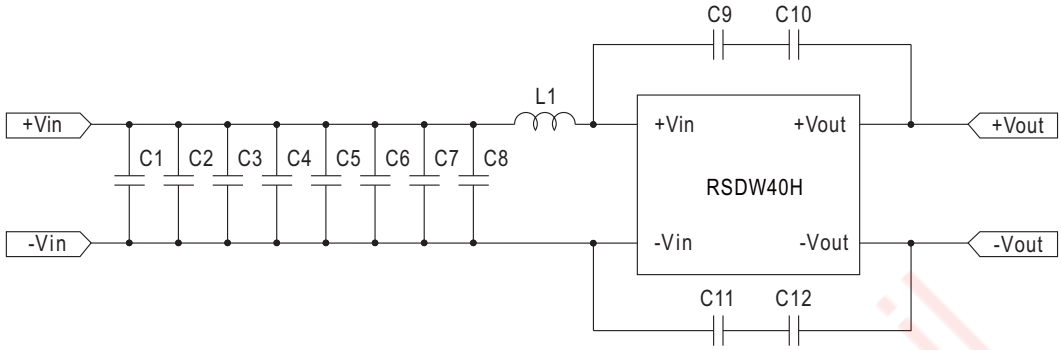

Model No.	L1	C1	C2	C3	C4	C5	C6	C7	C8	C9	C10	C11	C12
RSDW40H-5/12/24/48	68μH	0.68μH	0.68μH	0.68μH	0.68μH	0.68μH	0.68μH	0.68μH	0.68μH	4700pF	4700pF	4700pF	4700pF

※Required external componets to meet BS EN/EN55032 Class B emission are as below:

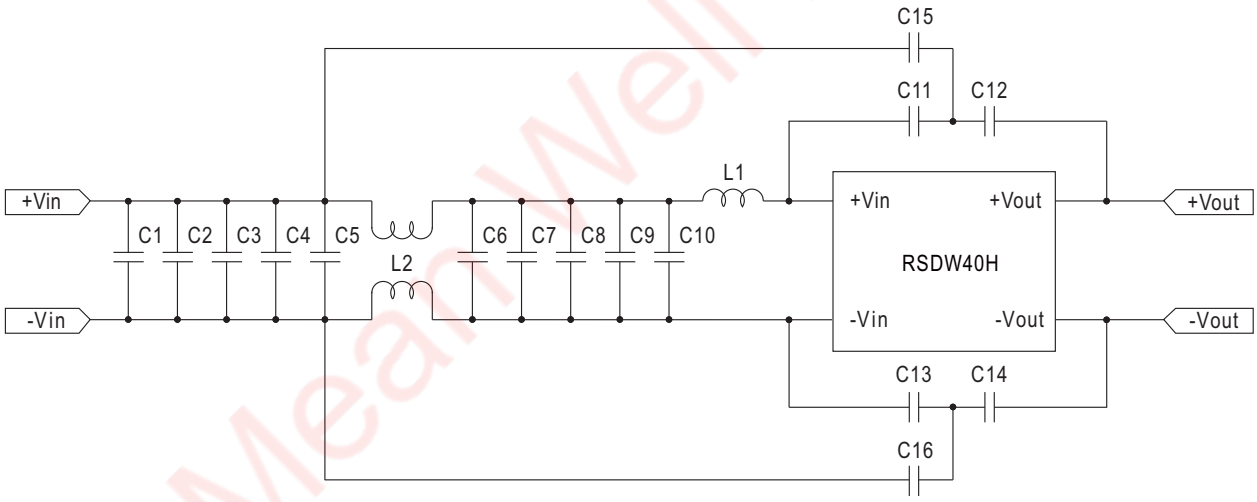

Model No.	L1	L2	C1	C2	C3	C4	C5	C6	C7	C8	C9	C10	C11	C12	C13	C14	C15	C16
RSDW40H-05/12	68μH	2.2mH	0.68μF	0.68μF	0.68μF	0.68μF	0.68μF	0.68μF	0.68μF	0.68μF	0.68μF	0.68μF	4700pF	4700pF	4700pF	4700pF	47pF	47pF
RSDW40H-24/48	68μH	2.2mH	0.68μF	0.68μF	0.68μF	0.68μF	0.68μF	0.68μF	0.68μF	0.68μF	0.68μF	0.68μF	4700pF	4700pF	4700pF	4700pF	33pF	33pF

MeanWell Brasil

LRI Distribuída no Brasil pela LRI | vendas@lri.com.br | 51 2129-3000

■ Packing

Standard Tube Packing	RSDW40/RDDW40			
	MPQ Per Tube (PCS)	One Tube G.W.	Max. Q'TY/ Carton(PCS)	One Carton G.W.
	18	730g	288	12.5Kg
	RSDW40H/RDDW40H			
	MPQ Per Tube (PCS)	One Tube G.W.	Max. Q'TY/ Carton(PCS)	One Carton G.W.
	18	910g	288	15Kg

Unit : mm

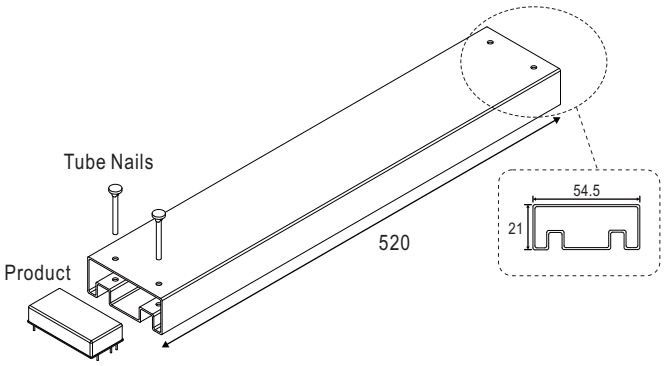



Tube pattern

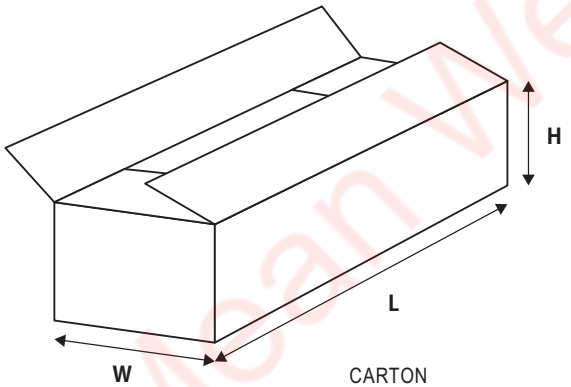

CARTON
L545 x W145 x H220

■ Installation Manual

Please refer to : http://www.meanwell.com/manual.html

Mean Well Brasil

LRI Distribuída no Brasil pela LRI | vendas@lri.com.br | 51 2129-3000