150W Quarter Brick 14~160Vdc wide Input Railway DC-DC Converter RQB150W12 series





(Bottom View)

Railway Automate Industrial Security Network Telecom

Features

- Quarter-brick(2.28" x 1.45" x 0.5") with industrial standard pin-out
- Compliance with railway standard EN50155
- 12:1(14~160Vdc) wide input range
- Wide operating temperature range -40 ~ +90℃
- No minimum load required
- Full encapsulated
- Protections: Short circuit (Continuous) / Overload / Over temperature / Over voltage / Input under voltage lockout
- 3KVAC I/O isolation
- Remote ON/OFF control and remote sense
- Triming output(±10%)
- 3 years warranty

Applications

- Bus, tram, metro or railway system
- Telecom/datacom system
- Wireless network
- Industrial control facility
- Instrument
- Analyzer
- Highly vibrating, heavily dusty, exteremely low or high temperature harsh environment

GTIN CODE

MW Search: https://www.meanwell.com/serviceGTIN.aspx

Description

RQB150W12 series is 150W module type DC-DC reliable railway with quarter brick package. It features international standard pins, a high efficiency up to 88%, wide working temperature range -40~+90℃, 3KVAC I/P-O/P isolation voltage, meet EN50155 with external circuits, continuous-mode short circuit protection, etc. The models input for 14~160VDC 12:1 wide input range, and various output voltage, 12V/24V/48V/54V for single output, which are suitable for railway, trams, buses and also can be used in the harsh environment with high vibration, high dust, extremely low or high temperature, etc.

Model Encoding

RQB 150 W12 – 110 S 12

- 12 — Output voltage (12/24/48/54Vdc)
- S — Single output
- 110 — Nominal input voltage (110Vdc)
- W12 — 12:1 wide input voltage (14~160Vdc)
- 150 — Rated wattage
- RQB — Series name

Distribuída no Brasil pela LRI | vendas@lri.com.br | 51 2129-3000

MODEL SELECTION TABLE

ORDER NO.	INPUT			OUTPUT		EFFICIENCY (Typ.)	CAPACITOR LOAD (MAX.)
	INPUT VOLTAGE (RANGE)	INPUT CURRENT		OUTPUT VOLTAGE	OUTPUT CURRENT		
		NO LOAD	FULL LOAD				
RQB150W12-110S12	Nominal 24V,36V,48V,72V,96V,110V (14 ~ 160V)	10mA	1.55A	12V	12.5A	88%	5000μF
RQB150W12-110S24		10mA	1.55A	24V	6.25A	87.5%	2000μF
RQB150W12-110S48		10mA	1.55A	48V	3.125A	87.5%	1000μF
RQB150W12-110S54		10mA	1.55A	54V	2.778A	88%	1000μF

Mean Well Brasil

LRI Distribuída no Brasil pela LRI | vendas@lri.com.br | 51 2129-3000

SPECIFICATION				
INPUT	VOLTAGE RANGE	14 ~ 160Vdc		
	SURGE VOLTAGE (0.1s max.)	200Vdc		
	FILTER	Pi type		
	PROTECTION	15A/250Vac time delay fuse		
	SETUP TIME	300ms max. (100% Load at Nominal Vin)		
OUTPUT	VOLTAGE ACCURACY	±1.0%		
	RATED POWER	150W		
	RIPPLE & NOISE Note.2	12V/24V=240mVp-p, 48V/54V=480mVp-p		
	LINE REGULATION Note.3	±0.2%		
	LOAD REGULATION Note.4	±0.5%		
	SWITCHING FREQUENCY (Typ.)	250KHz		
	EXTERNAL TRIM ADJ. RANGE (Typ.)	±10%		
	HOLD UP TIME	Please refer to page 5 Hold up time		
PROTECTION	SHORT CIRCUIT	Protection type : Continuous, automatic recovery		
	OVERLOAD	120 ~ 200% rated output power		
		Protection type : Recovers automatically after fault condition is removed		
	OVER VOLTAGE	110 ~ 150% rated output voltage		
		Protection type : Shutdown (latch)		
	OVER TEMPERATURE	+115℃ thermal shutdown, recovers automatically after fault condition is removed		
	UNDER VOLTAGE LOCKOUT	Start-up voltage	13.2V	
		Shutdown voltage	12V	
FUNCTION	REMOTE CONTROL	Power ON: R.C ~ -Vin > 3 ~ 12Vdc or open circuit Power OFF: R.C ~ -Vin < 1.2Vdc or short		
ENVIRONMENT	COOLING	Natural convection		
	WORKING TEMP.	-40 ~ +90℃ (Refer to "Derating Curve")		
	CASE TEMPERATURE	+115℃ max.		
	WORKING HUMIDITY	5% ~ 90% RH non-condensing		
	STORAGE TEMP., HUMIDITY	-55 ~ +125℃, 10 ~ 95% RH non-condensing		
	TEMP. COEFFICIENT	0.05% / ℃ (0 ~ 65℃)		
	SOLDERING TEMPERATURE	1.5mm from case of 3 ~ 5sec./260℃ max.		
	VIBRATION	EN61373		
	OPERATING ALTITUDE	4000 meters		
SAFETY & EMC (Note.6)	SAFETY STANDARDS	LVD IEC62368-1, EAC TP TC 020/2011 approved		
	WITHSTAND VOLTAGE	I/P-O/P:3KVAC I/P-CASE:1.5KVAC		
	ISOLATION RESISTANCE	I/P-O/P:1000M Ohms / 500VDC / 25℃/ 70% RH non-condensing		
	ISOLATION CAPACITANCE (Typ.)	3000pF		
	EMC EMISSION	**Parameter**	**Standard**	**Test Level / Note**
		Conducted	BS EN/EN55032	Class A/B with external components
		Radiated	BS EN/EN55032	Class A/B with external components
	EMC IMMUNITY	**Parameter**	**Standard**	**Test Level / Note**
		ESD	BS EN/EN61000-4-2	Level 3, ±6KV contact
		Radiated Susceptibility	BS EN/EN61000-4-3	Level 3, 10V/m
		EFT/Burest(Note.5)	BS EN/EN61000-4-4	Level 3, On power input port, ±2KV external input capacitor required
		Surge(Note.5)	BS EN/EN61000-4-5	Level 3, On power input port, ±2KV external input capacitor required
		Conducted	BS EN/EN61000-4-6	Level 3, 10V/m(r.m.s.)
		Magnetic Field	BS EN/EN61000-4-8	Level 3, 10A/m
	RAILWAY STANDARD	EN50155 including EN61373 for shock & vibration, EN50121-3-2 for EMC		
OTHERS	MTBF	185Khrs MIL-HDBK-217F(25℃)		
	DIMENSION (L*W*H)	**57.9*36.8*12.7mm (2.28*1.45*0.5 inch)**		
	CASE MATERIAL	Aluminum base plate with plastic case		
	PACKING	75g ; 11pcs/per tube, 132pcs/12 tube/per carton		
NOTE	1.All parameters are specified at normal input(110Vdc), rated load, 25℃ 70% RH ambient. 2.Ripple & noise are measured at 20MHz by using a 12" twisted pair terminated with a 0.1μf & 47μf capacitor. 3.Line regulation is measured from low line to high line at rated load. 4.Load regulation is measured from 0% to 100% rated load. 5.External input capacitor required 100μF/200V x 3 . 6.The final equipment must be re-confirm that it still meet EMC directives. For guidance on how to perform these EMC tests, please refer to “EMI testing of component power supplies.”(as available on http://www.meanwell.com) ※ Product Liability Disclaimer : For detailed information, please refer to https://www.meanwell.com/serviceDisclaimer.aspx			

Mean Well Brasil

LRI Distribuída no Brasil pela LRI | vendas@lri.com.br | 51 2129-3000

■ External Output Trimming

In order to trim the voltage up or down, one needs to connect the trim resistor either between the trim pin and -Vout for trim_up or between trim pin and +Vout for trim_down. The output voltage trim range is -10% to +10%. This is shown in Figures 1 and 2:

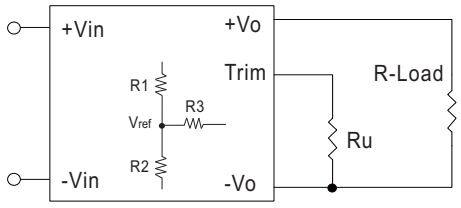

Figure 1. Trim_up Voltage Setup

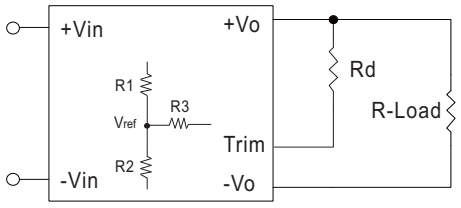

Figure 2. Trim_down Voltage Setup

1. The value of Rtrim_up defined as:

$$A = \frac{V_{ref}}{V_o' - V_{ref}} \times R1$$

$$R_{trim_up} = \frac{AR2}{R2-A} - R3$$

For example, to trim_up the output voltage of 12V module (RQB150W12-110S12) by 10% to 13.2V, R_{trim_up} is calculated as follows:

$V_{o,nom}$ = 12V
V_o' = 13.2V
V_{ref} = 2.5V
R1 = 38KΩ
R2 = 10 KΩ
R3 = 68KΩ

$$A = \frac{V_{ref}}{V_o' - V_{ref}} \times R1$$

$$= \frac{2.5}{13.2 - 2.5} \times 38 = 8.878$$

$$R_{trim_up} = \frac{AR2}{R2-A} - R3$$

$$= \frac{8.878 \times 10}{10 - 8.878} - 68$$

$$= 11.126K\Omega$$

Table 1 – Trim_up and Trim_down Resistor Values

Model Number	Vo,nom (V)	Vref (V)	R1 (KΩ)	R2 (KΩ)	R3 (KΩ)
RQB150W12-110S12	12	2.5	38	10	68
RQB150W12-110S24	24	2.5	86	10	76.8
RQB150W12-110S48	48	2.5	182	10	80.6
RQB150W12-110S54	54	2.5	206.1	10	82

Note:
1.R_{trim_up}, R_{trim_down} is mean trim resistor, please check the formula.
2.A & B: user define parameter, no actual meanings.
3.Vo′ is target trim voltage.
4.Value for R1, R2, R3 and Vref refer to above table.

2. The value of Rtrim_down defined as:

$$A = \frac{V_o' - V_{ref}}{V_{ref}} \times R2$$

$$R_{trim_down} = \frac{AR1}{R1-A} - R3$$

For example, to trim_down the output voltage of 12V module (RQB150W12-110S12) by 10% to 10.8V, R_{trim_down} is calculated as follows:

$V_{o,nom}$ = 12V
V_o' = 10.8V
V_{ref} = 2.5V
R1 = 38 KΩ
R2 = 10 KΩ
R3 = 68 KΩ

$$A = \frac{V_o' - V_{ref}}{V_{ref}} \times R2$$

$$= \frac{10.8 - 2.5}{2.5} \times 10 = 3.32 \times 10 = 33.2$$

$$R_{trim_down} = \frac{AR1}{R1-A} - R3$$

$$= \frac{33.2 \times 38}{38 - 33.2} - 68$$

$$= 194.83K\Omega$$

LRI Distribuída no Brasil pela LRI | vendas@lri.com.br | 51 2129-3000

■ Hold-up Time

During the transition of different power source, the electric power on the train become unstable in a short time. Such as a sudden voltage drop or a short-term power failure. Under this situation, hold-up time circuit is suitable for this situation.

As Figure 3 shows, hold-up time circuit comprises R1, D1 and Chold. The capacity of Chold decides the hold-up time during interruption of input power.

And Figure 4 shows the table for Chold with different input voltage. For example, if input voltage is 110V, and output load is full load. The Chold need 470μF for hold-up 10ms.

During start up, R1 endures a high pulse power, and should be selected carefully. The power is related to Vbus and Chold. We recommend to use 25Ω/10W resistor.

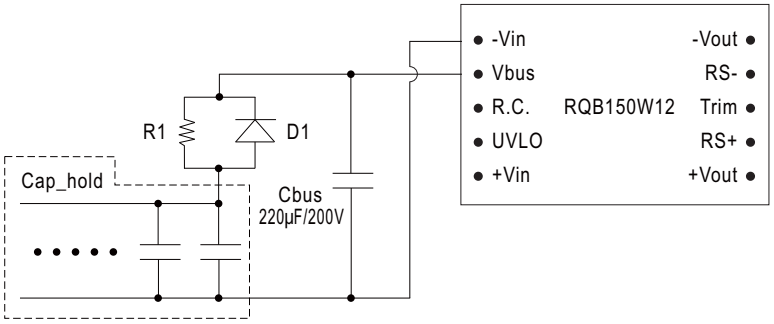

Figure 3 Hold-Up Time Circuit

Table 2 – Cap_hold table (Hold up time)

Nominal Vin	24V	48V	72V	96V	110V
10ms(S2)	1800μF	1800μF	1800μF	600μF	500μF
20ms(S3)	3600μF	3600μF	3600μF	1200μF	820μF
30ms(C2)	4800μF	4800μF	4800μF	1800μF	1200μF

■ Derating Curve

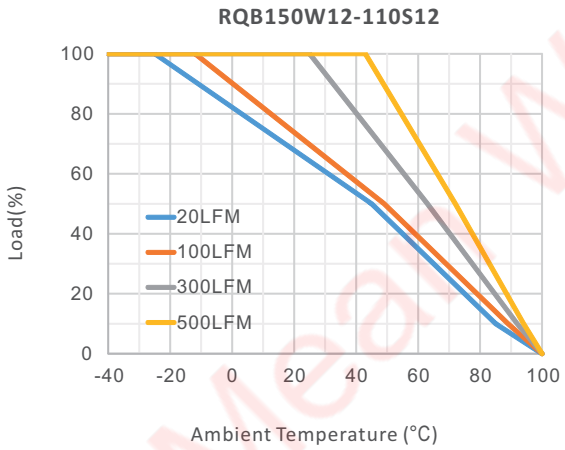

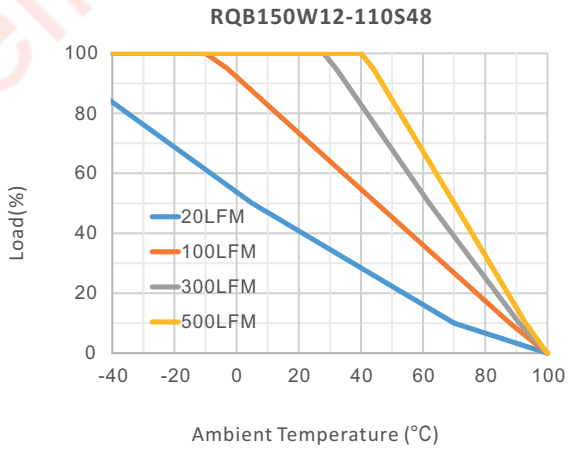

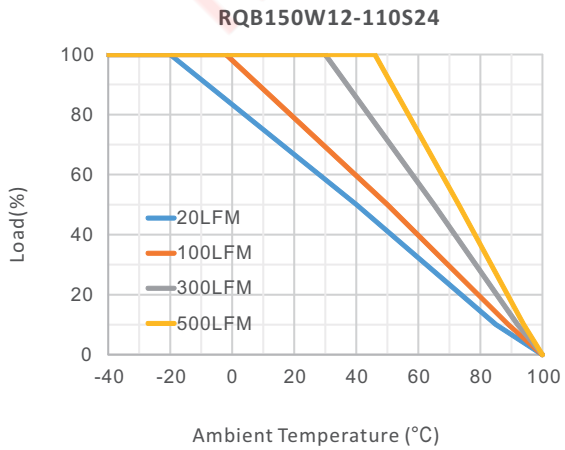

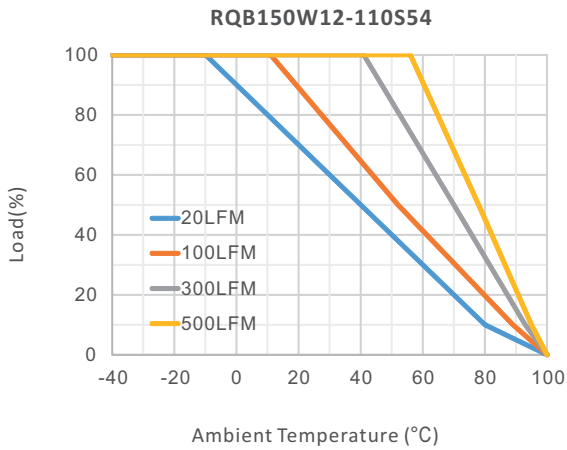

Note 1. The de-rating curve was measured at 110Vdc input with natural convection.

Note 2. In order to meet higher "derating curve" requirements, the heat dissipation can be increased by increasing the air flow (LFM) to meet the requirements.

The recommended thermal resistance formula is as follows：

LRI Distribuída no Brasil pela LRI | vendas@lri.com.br | 51 2129-3000

The derating curve of the converter's output load with the ambient temperature. Above derating curve shows the operating ambient temperature range is from -40°C to 100°C. The output load should derating when ambient temperature over -25°C. And the environmental convection is below 20LFM.
When the ambient temperature over -25°C, RQB150W12 should derating to certain load. For example, if the ambient temperature is about 45°C, the RQB150W12 output load should derating to 50% of full load.
The thermal resistor can be calculated by below formula. Take RQB150W12 as an example, which operating at nominal voltage and output load at full load. And the power dissipation (Pd)

$$Pd = Pin - Po = \frac{Po(1-eff)}{eff}$$

Pd = 12*12.5*(1-0.87)/0.87 = 22.4W
So, the power dissipation (Pd) is about 22.4W at ambient temperature 0°C. The thermal resistance (Rca) from case to ambience is 5.75(°C/W).
The maximum case temperature rise is ΔT = Pd * Rca = 22.4W * 5.75 (°C/W) = 128.8°C
The maximum case temperature is Ta = Tc - ΔT = 105°C -128.8°C = -23.8°C
So, the Ta for full load is around -25°C

Power Derating PCB Layout Suggestion

Power module can operate in variety of thermal environments. However, sufficient cooling should be provided to ensure the reliable operation of the unit. Heat can be removed by conduction, convection, and radiation to the surrounding environment.
Figure 4 is the PCB layout, which to measure RQB150W12 thermal performed, the dimension is **137 * 88 * 1.6mm, 2 OZ**. There copper can help RQB150W12 to conduct heat through the body to the PCB.

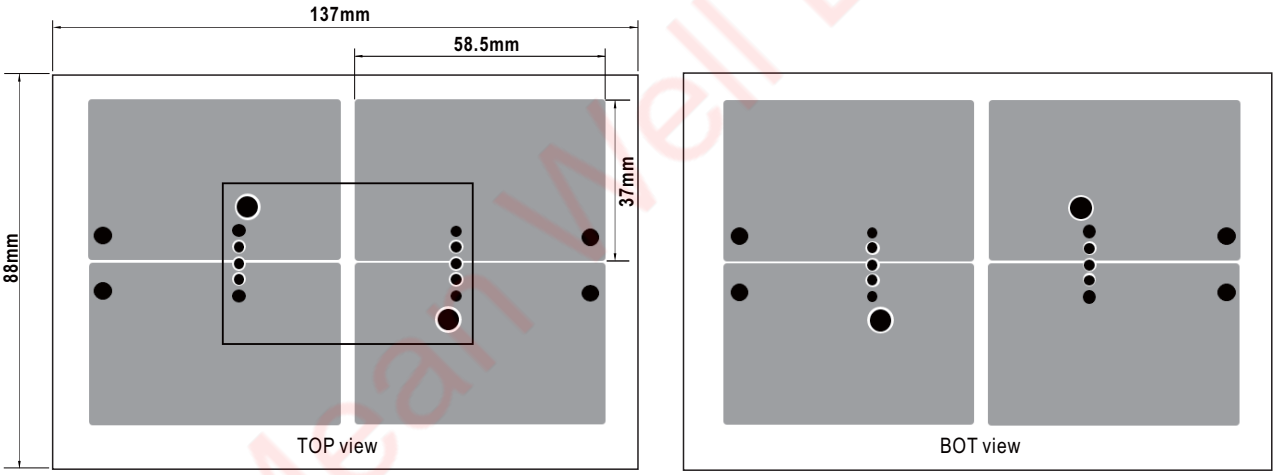

Figure 4

Mean Well Brasil

LRI Distribuída no Brasil pela LRI | vendas@lri.com.br | 51 2129-3000

■ Mechanical Specification

- All dimensions in mm(inch)
- Tolerance: x.x±0.5mm (x.x±0.02")
  x.xx±0.25mm(x.xx±0.01")
- Pin size is:1.x±0.1mm (0.04" ±0.005")

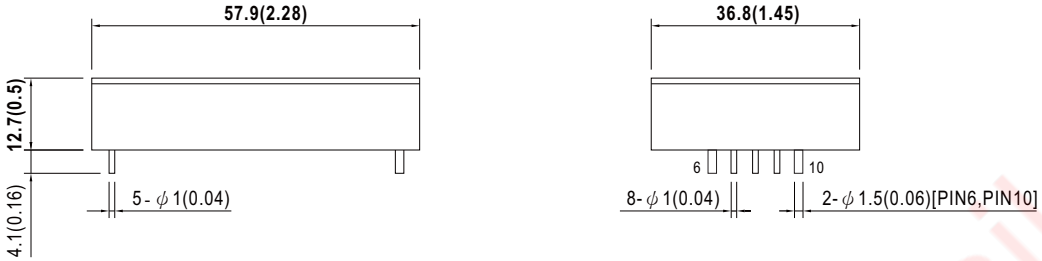

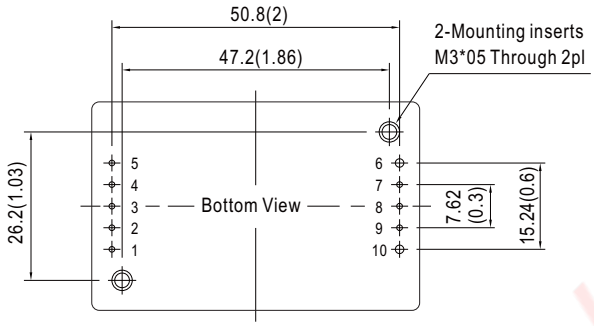

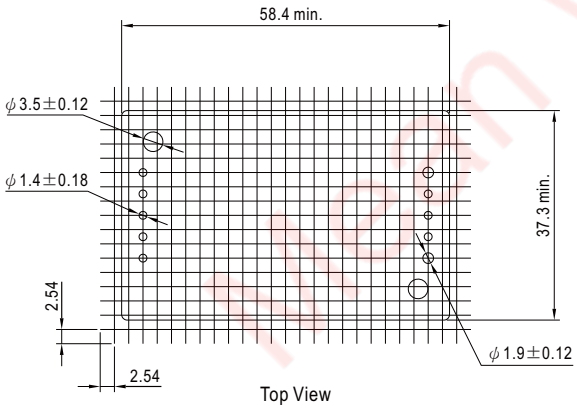

■ Plug Assignment

Pin-Out			
Pin No.	Output	Pin No.	Output
1	+Vin	6	-Vout
2	UVLO	7	-S
3	Remote ON/OFF	8	Trim
4	Vbus	9	+S
5	-Vin	10	+Vout

Mean Well Brasil

Distribuída no Brasil pela LRI | vendas@lri.com.br | 51 2129-3000

■ EMC Suggestion Circuit

※ EMI Test standard: BS EN/EN55032 Class A with external circuit. Below figure shows the suggestion circuit for Class A.
(Test Condition: Input Voltage: 110Vdc, Output Load: Full Load)

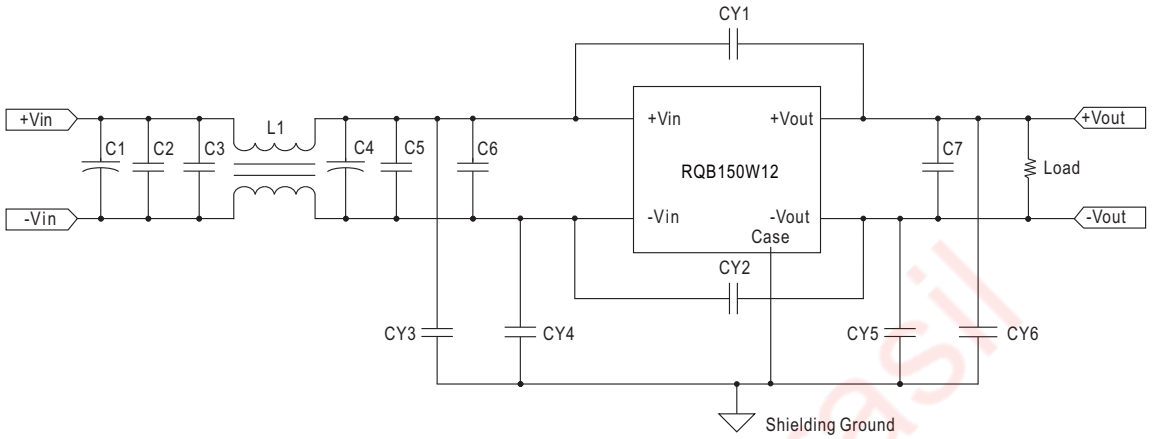

Model No.	BS EN/EN55032 Class A					
	C1,C4	C2,C3,C5,C6	L1	CY1,CY2	CY3,CY4,CY5,CY6	C7
RQB150W12-110S12	100μF/200V	0.68μF/250V	2.0mH	1000pF/5KV	1200pF/3KV*4	4.7μF/100V*6
RQB150W12-110S24	220μF/200V					
RQB150W12-110S48					1200pF/3KV*5	
RQB150W12-110S54						

※ EMI Test standard: BS EN/EN55032 Class B with external circuit. Below figure shows the suggestion circuit for Class B.
(Test Condition: Input Voltage: 110Vdc, Output Load: Full Load)

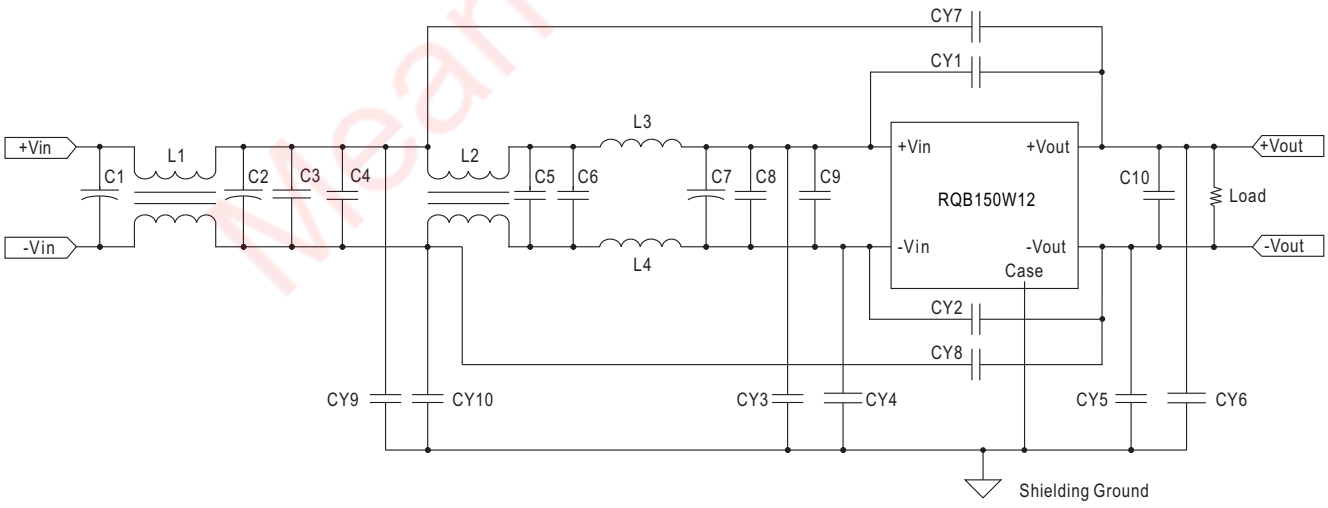

Model No.	BS EN/EN55032 Class B								
	C1,C2,C7	C3,C4,C5,C6,C8,C9	L1,L2	L3,L4	CY1	CY2	CY3,CY4,CY5,CY6	CY7,CY8	C10
RQB150W12-110S12	100μF/200V	0.68μF/250V	2.0mH	4.7μH	2200pF / 5KV	1000pF / 5KV	2200pF/3KV*4	470pF/5KV	4.7μF/100V*6
RQB150W12-110S24									
RQB150W12-110S48									
RQB150W12-110S54									

LRI Distribuída no Brasil pela LRI | vendas@lri.com.br | 51 2129-3000

■ Packing

Standard Tube Packing	MPQ Per Tube (PCS)	One Tube G.W.	Max. Q'TY/ Carton(PCS)	One Carton G.W.
Unit : mm 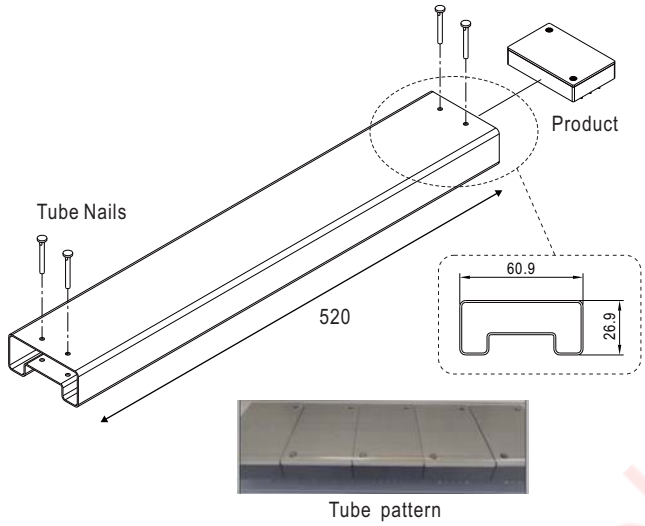 Tube pattern 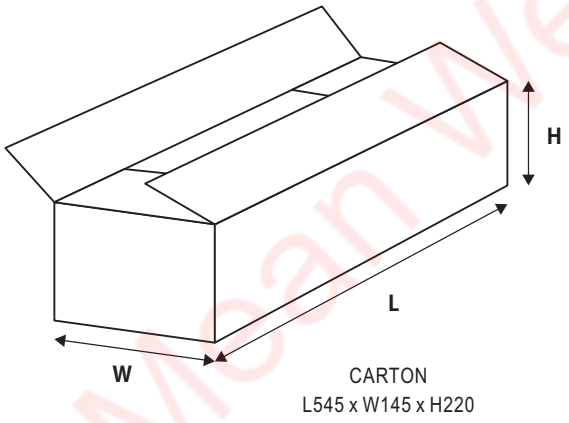 CARTON L545 x W145 x H220	11	955g	132	12.5Kg

■ Installation Manual

Please refer to : http://www.meanwell.com/manual.html

Mean Well Brasil

Distribuída no Brasil pela LRI | vendas@lri.com.br | 51 2129-3000