65W Dual Output Switching Power Supply

RPD-65 series

User's Manual



■ Features :

- Universal AC input/Full range
- 12V or 24V high peak output current capability
- Low leakage current<1mA
- Protections: Short circuit / Overload / Over voltage
- 60W free air convection, 77.1W with 18CFM forced air
- 100% full load burn-in test
- Fixed switching frequency at 65KHz
- 2 years warranty

■ GTIN CODE

MW Search: https://www.meanwell.com/serviceGTIN.aspx

UL62368-1 BS EN/EN62368-1 TPTC004 IEC62368-1

SPECIFICATION

MODEL		RPD-65C		RPD-65D	
OUTPUT	OUTPUT NUMBER	CH1	CH2	CH1	CH2
	DC VOLTAGE	12V	5V	24V	5V
	RATED CURRENT	4.5A	1.2A	2.25A	1.2A
	CURRENT RANGE	0 ~ 5.8A	0 ~ 1.5A	0 ~ 2.9A	0 ~ 1.5A
	PEAK LOAD Note.4	7.5A	Rated load	3.75A	Rated load
	RATED POWER	60W		60W	
	OUTPUT POWER (max.)	Rated output power for convection; 77.1W with 18CFM min. forced air			
	RIPPLE & NOISE (max.) Note.2	120mVp-p	50mVp-p	150mVp-p	50mVp-p
	VOLTAGE ADJ. RANGE	CH1:11.4 ~ 12.8V		CH1:22.8 ~ 26.4V	
	VOLTAGE TOLERANCE Note.3	±2.0%	±5.0%	±2.0%	±5.0%
	LINE REGULATION	±1.0%	±1.0%	±1.0%	±1.0%
	LOAD REGULATION	±2.0%	±5.0%	±2.0%	±5.0%
	SETUP, RISE TIME	800ms, 20ms at full load			
	HOLD UP TIME (Typ.)	20ms at full load			
INPUT	VOLTAGE RANGE	90 ~ 264VAC 127 ~370VDC			
	FREQUENCY RANGE	47 ~ 440Hz			
	EFFICIENCY (Typ.)	79%		81%	
	AC CURRENT (Typ.)	1.5A/115VAC 0.9A/230VAC			
	INRUSH CURRENT (Typ.)	COLD START 25A/115VAC 50A/230VAC			
	LEAKAGE CURRENT	<1mA			
PROTECTION	OVERLOAD	90 ~ 125W output power			
		Protection type : Hiccup mode, recovers automatically after fault condition is removed.			
	OVER VOLTAGE	CH1:13.8 ~ 16.2V		CH1:27.6 ~ 32.4V	
		Protection type : Hiccup mode, recovers automatically after fault condition is removed.			
ENVIRONMENT	WORKING TEMP.	-20 ~ +60℃ (Refer to "Derating Curve")			
	WORKING HUMIDITY	20 ~ 90% RH non-condensing			
	STORAGE TEMP., HUMIDITY	-40 ~ +85℃, 10 ~ 95% RH			
	TEMP. COEFFICIENT	±0.04%/℃ (0 ~ 50℃) on CH1 output			
	VIBRATION	10 ~ 500Hz, 2G 10min./1cycle, period for 60min. each along X, Y, Z axes			
SAFETY & EMC (Note 5)	SAFETY STANDARDS	UL62368-1, TUV BS EN/EN62368-1, EAC TP TC 004 approved			
	WITHSTAND VOLTAGE	I/P-O/P:3KVAC I/P-FG:2KVAC O/P-FG:0.5KVAC			
	ISOLATION RESISTANCE	I/P-O/P, I/P-FG, O/P-FG:100M Ohms / 500VDC / 25℃/ 70% RH			
	EMC EMISSION	Compliance to BS EN/EN55032 (CISPR32) Class B, BS EN/EN61000-3-2,-3, EAC TP TC 020			
	EMC IMMUNITY	Compliance to BS EN/EN61000-4-2,3,4,5,6,8,11, BS EN/EN55035, light industry level, EAC TP TC 020			
OTHERS	MTBF	2701.1K hrs min. Telcordia SR-332 (Bellcore) ; 523.4K hrs min. MIL-HDBK-217F (25℃)			
	DIMENSION	127*76*29mm (L*W*H)			
	PACKING	0.24Kg; 63pcs/16Kg/1.28CUFT			

NOTE

1. All parameters NOT specially mentioned are measured at 230VAC input, rated load and 25℃ of ambient temperature.
2. Ripple & noise are measured at 20MHz of bandwidth by using a 12" twisted pair-wire terminated with a 0.1 μF & 47 μF parallel capacitor.
3. Tolerance : includes set up tolerance, line regulation and load regulation.
4. 10% duty cycle maximum within every second. Average output power should not exceed the rated power, output voltage above 90% DC voltage.
5. The power supply is considered a component which will be installed into a final equipment. The final equipment must be re-confirmed that it still meets EMC directives. For guidance on how to perform these EMC tests, please refer to "EMI testing of component power supplies." (as available on https://www.meanwell.com//Upload/PDF/EMI_statement_en.pdf)
6. The ambient temperature derating of 3.5℃/1000m with fanless models and of 5℃/1000m with fan models for operating altitude higher than 2000m(6500ft).

※ Product Liability Disclaimer : For detailed information, please refer to https://www.meanwell.com/serviceDisclaimer.aspx

LRI Distribuída no Brasil pela LRI | vendas@lri.com.br | 51 2129-3000

■ Mechanical Specification

(Unit: mm , tolerance ± 1mm)

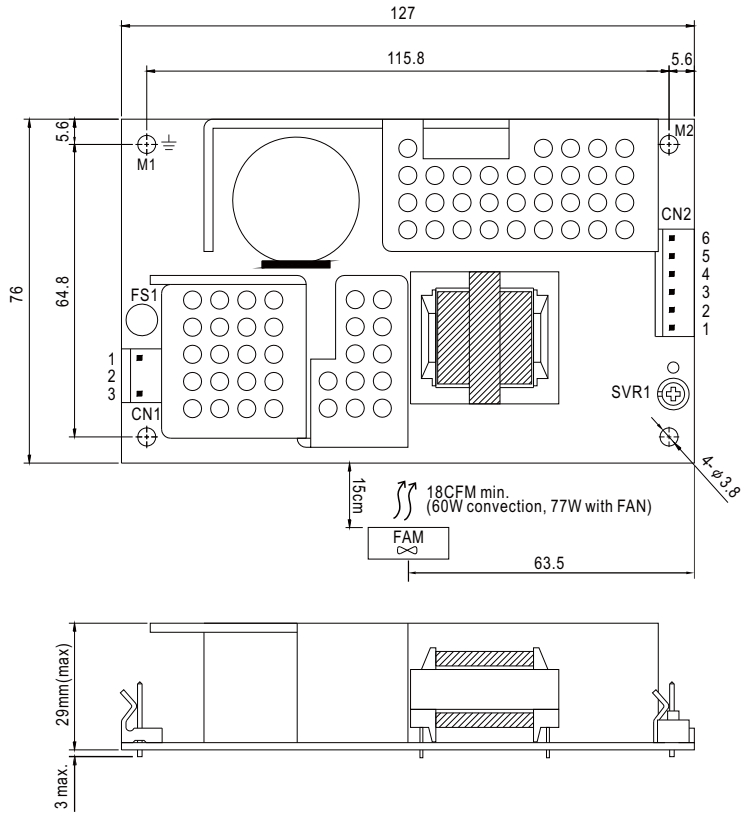

AC Input Connector (CN1) : Molex 5273-03 or equivalent

Pin No.	Assignment	Mating Housing	Terminal
1	AC/L	Molex 5195 or equivalent	Molex 5194 or equivalent
2	No Pin		
3	AC/N		

DC Output Connector (CN2) : Molex 5273-06 or equivalent

Pin No.	Assignment	Mating Housing	Terminal
1,2	V1	Molex 5195 or equivalent	Molex 5194 or equivalent
3,4	GND		
5	V2		
6	NC		

⏚ : Grounding Required

⚠ 1.M1 is safety ground. For better EMC performance, Please secure an electrical connection between M1,M2 and chassis grounding.

■ Block Diagram

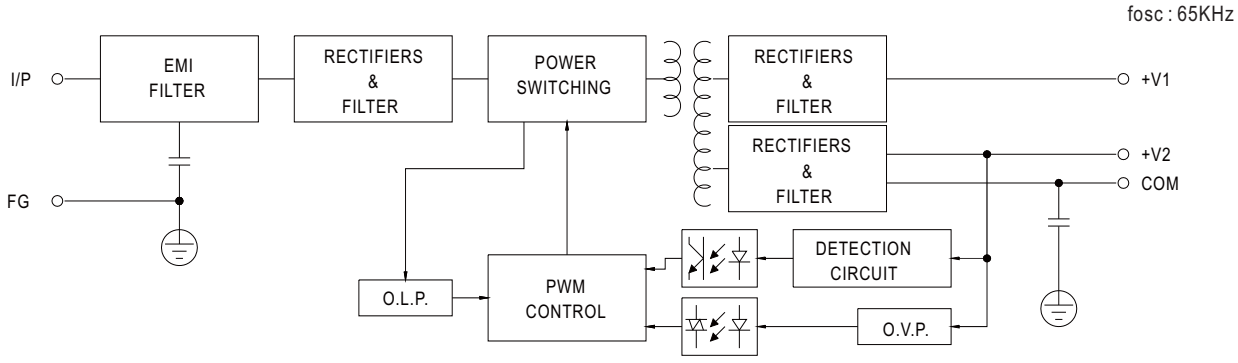

LRI Distribuída no Brasil pela LRI | vendas@lri.com.br | 51 2129-3000

■ Derating Curve

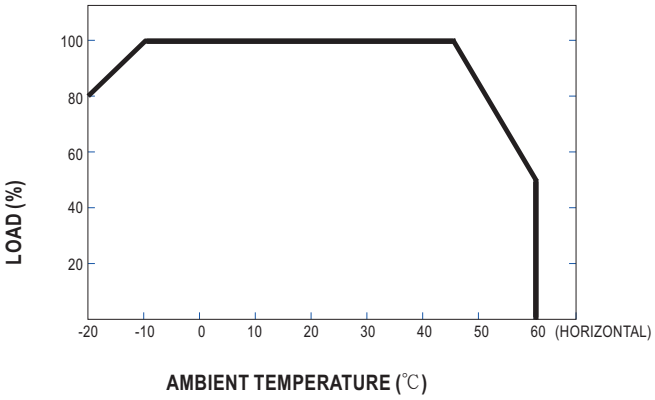

■ Output Derating VS Input Voltage

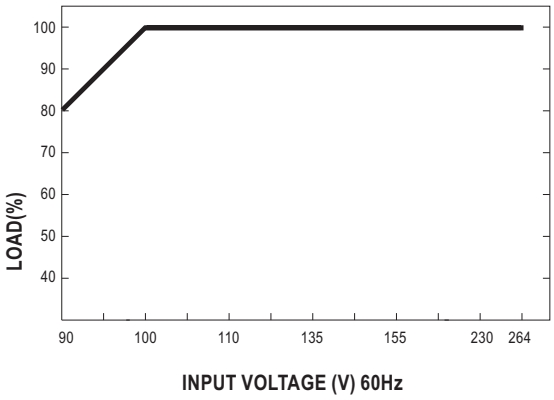

LRI Distribuída no Brasil pela LRI | vendas@lri.com.br | 51 2129-3000