# 20W 2"x1" Package Reliable Railway DC-DC Converter RSDW20 & RDDW20 series





## Features

- Compliance with EN50155 railway standard
- DIP 2"x1" package with standard pinout
- 4:1 wide input range
- Wide operating temperature range -40 ~ +85℃
- No minimum load required
- Full encapsulated
- Protections: Short circuit (Continuous) / Overload / Over voltage / Input under voltage
- 1.5KVDC,3KVDC I/O isolation by models
- Remote ON/OFF control
- 3 years warranty

## Applications

- Bus, tram, metro or railway system
- Telecom/datacom system
- Wireless network
- Industrial control facility
- Instrument
- Analyzer
- Highly vibrating, heavily dusty, exteremely low or high temperature harsh environment

## GTIN CODE

MW Search: https://www.meanwell.com/serviceGTIN.aspx

## Description

RSDW20 and RDDW20 series are 20W module type DC-DC reliable railway converter with 2"x1" package. It features international standard pins, a high efficiency up to 90%, wide working temperature range -40~+85℃, 1.5KVDC(F/G models)/3KVDC(H models) I/P-O/P isolation voltage, compliance with EN50155 railway standard, continuous-mode short circuit protection, etc. The models account for different input voltage 9~36V, 18~75V and 43~160V 4:1 wide input range, and various output voltage, 3.3V/5V/12V/15V for single output and ±5V/±12V/±15V for dual outputs, which are suitable for railway, trams, buses and also can be used in the harsh environment with high vibration, high dust, extremely low or high temperature, etc.

## Model Encoding

**R S DW20 H – 12**

- 12 — Output voltage (3.3/5/12/15Vdc，±5/±12/±15Vdc)
- H — Input voltage (F: 9~36Vdc，G: 18~75Vdc，H: 43~160Vdc)
- 20 — Rated wattage
- S — Series name { S:Single output / D:Dual output



Distribuída no Brasil pela LRI | vendas@lri.com.br | 51 2129-3000

## MODEL SELECTION TABLE

| ORDER NO. | INPUT | | | OUTPUT | | EFFICIENCY (Typ.) | CAPACITOR LOAD (MAX.) |
|---|---|---|---|---|---|---|---|
| | INPUT VOLTAGE (RANGE) | INPUT CURRENT | | OUTPUT VOLTAGE | OUTPUT CURRENT | | |
| | | NO LOAD | FULL LOAD | | | | |
| RSDW20F-03 | Normal 24V (9 ~ 36V) | 55mA | 869mA | 3.3V | 5500mA | 87% | 5500μF |
| RSDW20F-05 | | 55mA | 935mA | 5V | 4000mA | 90% | 4000μF |
| RSDW20F-12 | | 55mA | 928mA | 12V | 1670mA | 90% | 1800μF |
| RSDW20F-15 | | 55mA | 935mA | 15V | 1330mA | 90% | 1500μF |
| RDDW20F-05 | | 70mA | 945mA | ±5V | ±0 ~ 2000mA | 89% | *2000μF |
| RDDW20F-12 | | 35mA | 947mA | ±12V | ±0 ~ 835mA | 88% | *1000μF |
| RDDW20F-15 | | 35mA | 935mA | ±15V | ±0 ~ 666mA | 88% | *800μF |
| RSDW20G-03 | Normal 48V (18 ~ 75V) | 25mA | 430mA | 3.3V | 5500mA | 88% | 5500μF |
| RSDW20G-05 | | 25mA | 465mA | 5V | 4000mA | 89% | 4000μF |
| RSDW20G-12 | | 25mA | 465mA | 12V | 1670mA | 90% | 1800μF |
| RSDW20G-15 | | 25mA | 465mA | 15V | 1330mA | 90% | 1500μF |
| RDDW20G-05 | | 45mA | 468mA | ±5V | ±0 ~ 2000mA | 89% | *2000μF |
| RDDW20G-12 | | 25mA | 470mA | ±12V | ±0 ~ 835mA | 88% | *1000μF |
| RDDW20G-15 | | 25mA | 470mA | ±15V | ±0 ~ 666mA | 88% | *800μF |
| RSDW20H-05 | Normal 110V (43 ~ 160V) | 3mA | 205mA | 5V | 4000mA | 88.5% | 5600μF |
| RSDW20H-12 | | 3mA | 202mA | 12V | 1670mA | 90% | 1000μF |
| RSDW20H-15 | | 3mA | 203mA | 15V | 1330mA | 89.5% | 1000μF |
| RDDW20H-12 | | 3mA | 206mA | ±12V | ±0 ~ 833mA | 89% | *680μF |
| RDDW20H-15 | | 3mA | 206mA | ±15V | ±0 ~ 667mA | 88.5% | *350μF |

* For each output



LRI Distribuída no Brasil pela LRI | vendas@lri.com.br | 51 2129-3000

## SPECIFICATION

| | | | | |
|---|---|---|---|---|
| INPUT | VOLTAGE RANGE | F: 9~36Vdc , G: 18~75Vdc , H: 43~160Vdc | | |
| | SURGE VOLTAGE (100ms max.) | 24Vin models : 50Vdc, 48Vin models : 100Vdc, 110Vin models : 200Vdc | | |
| | FILTER | Pi type | | |
| | PROTECTION | Fuse recommended. 24Vin models: 4A delay time Type, 48Vin models: 2A delay time Type, 110Vin models: 0.8A delay time Type | | |
| OUTPUT | VOLTAGE ACCURACY | ±1.5% | | |
| | RATED POWER | 20W | | |
| | RIPPLE & NOISE Note.2 | 60mVp-p | | |
| | LINE REGULATION Note.3 | ±0.2% | | |
| | LOAD REGULATION Note.4 | Single output models: ±0.5%, Dual output models:±1% | | |
| | CROSS REGULATION | ±5% @ 25%~100% load | | |
| | SWITCHING FREQUENCY (Typ.) | F/G: Single output 350KHz, Dual output 400KHz<br>H: 250KHz | | |
| | EXTERNAL TRIM ADJ. RANGE (Typ.) | ±10% (Single output model only) | | |
| PROTECTION | SHORT CIRCUIT | Protection type : Continuous, automatic recovery | | |
| | OVERLOAD | 110 ~ 160% rated output power | | |
| | | Protection type : Recovers automatically after fault condition is removed | | |
| | OVER VOLTAGE | Protection type : Clamp by diode | | |
| | UNDER VOLTAGE LOCKOUT | Start-up voltage | 24Vin: 8.8Vdc, 48Vin: 17Vdc, 110Vin: 40Vdc | |
| | | Shutdown voltage | 24Vin: 8Vdc, 48Vin: 16Vdc, 110Vin: 38Vdc | |
| FUNCTION | REMOTE CONTROL | Power ON: >5.5~75Vdc or open circuit (F/G models) ; >3.5~75Vdc or open circuit (H models)<br>Power OFF: <1.2Vdc or short (F/G/H models) | | |
| ENVIRONMENT | COOLING | Free-air convection | | |
| | WORKING TEMP. | -40 ~ +85℃ (Refer to "Derating Curve") | | |
| | CASE TEMPERATURE | +105℃ max. | | |
| | WORKING HUMIDITY | 20% ~ 90% RH non-condensing | | |
| | STORAGE TEMP., HUMIDITY | -55 ~ +125℃, 10 ~ 95% RH non-condensing | | |
| | TEMP. COEFFICIENT | 0.03% / ℃ (0 ~ 71℃) | | |
| | SOLDERING TEMPERATURE | 1.5mm from case of 1 ~ 3sec./260℃ max. | | |
| | VIBRATION | 10 ~ 500Hz, 2G 10min./1cycle, period for 60min. each along X, Y, Z axes | | |
| SAFETY & EMC (Note.5) | SAFETY STANDARDS | EAC TP TC 020/2011(EAC TP TC 004 for 48Vin/110Vin type only) approved | | |
| | WITHSTAND VOLTAGE | F/G: I/P-O/P 1.5KVDC, H: I/P-O/P 3KVDC | | |
| | ISOLATION RESISTANCE | I/P-O/P:100M Ohms / 500VDC / 25℃/ 70% RH | | |
| | ISOLATION CAPACITANCE (Typ.) | 1000pF | | |
| | EMC EMISSION | **Parameter** | **Standard** | **Test Level / Note** |
| | | Conducted | BS EN/EN55032 | Class B with external components |
| | | Radiated | BS EN/EN55032 | Class B with external components |
| | EMC IMMUNITY | **Parameter** | **Standard** | **Test Level / Note** |
| | | ESD | BS EN/EN61000-4-2 | Level 2, ±8KV air, ±4KV contact |
| | | Radiated Susceptibility | BS EN/EN61000-4-3 | Level 2, 3V/m |
| | | EFT/Bursts | BS EN/EN61000-4-4 | Level 1, 0.5KV |
| | | Surge | BS EN/EN61000-4-5 | Level 1, 0.5KV Line-Line |
| | | Conducted | BS EN/EN61000-4-6 | Level 2, 3V(e.m.f.) |
| | RAILWAY STANDARD | EN50155 including EN61373 for shock & vibration, EN50121-3-2 for EMC | | |
| OTHERS | MTBF | F/G: 720Khrs ; H: 880Khrs MIL-HDBK-217F(25℃) | | |
| | DIMENSION (L*W*H) | 50.8*25.4*10.2mm (2*1*0.4 inch) | | |
| | CASE MATERIAL | Black coated copper with Non-Conductive Base | | |
| | PACKING | 35g ; 12pcs/per tube, 300pcs/25 tube/per carton | | |

**NOTE**

1.All parameters are specified at normal input(F:24Vdc, G:48Vdc, H:110Vdc), rated load, 25℃ 70% RH ambient.
2.Ripple & noise are measured at 20MHz by using a 12" twisted pair terminated with a 0.1μf & 47μf capacitor.
3.Line regulation is measured from low line to high line at rated load.
4.Load regulation is measured from 0% to 100% rated load.
5.The final equipment must be re-confirm that it still meet EMC directives. For guidance on how to perform these EMC tests, please refer to “EMI testing of component power supplies.”(as available on http://www.meanwell.com)
※ Product Liability Disclaimer ： For detailed information, please refer to https://www.meanwell.com/serviceDisclaimer.aspx



LRI Distribuída no Brasil pela LRI | vendas@lri.com.br | 51 2129-3000

## ■ External Output Trimming

In order to trim the voltage up or down one needs to connect the trim resistor either between the trim pin and -Vo for trim-up and between trim pin and +Vo for trim-down. The output voltage trim range is ±10%. This is shown in Figures 1 and 2:

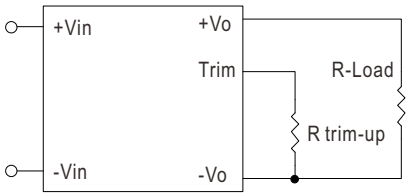


Figure 1. Trim-up Voltage Setup

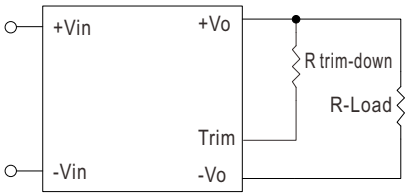


Figure 2. Trim-down Voltage Setup

**1. The value of Rtrim-up defined as:**

$$R_{trim-up} = \left(\frac{V_r \times R1 \times (R2 + R3)}{(V_o - V_{o,nom}) \times R2}\right) - Rt\ (K\Omega)$$

Where

$R_{trim-up}$ is the external resistor in Kohm.

$V_{o,nom}$ is the nominal output voltage.

$V_o$ is the desired output voltage.

R1, Rt, R2, R3 and Vr are internal to the unit and are defined in Table 1.

For example, to trim-up the output voltage of 5.0V module (RSDW20F-05) by 10% to 5.5V, R trim-up is calculated as follows:

$V_o - V_{o,nom} = 5.5 - 5.0 = 0.5V$

R1 = 2.32 KΩ

R2 = 2.32 KΩ

R3 = 0 KΩ

Rt = 8.2 KΩ

Vr = 2.5V

$$R_{trim-up} = \left(\frac{2.5 \times 2.32 \times (2.32+0)}{0.5 \times 2.32}\right) - 8.2 = 3.4(K\Omega)$$

Table 1 – Trim up and Trim down Resistor Values

| Model Number | Output Voltage(V) | R1 (KΩ) | R2 (KΩ) | R3 (KΩ) | Rt (KΩ) | Vr (V) |
|---|---|---|---|---|---|---|
| RSDW20F-03<br>RSDW20G-03 | 3.3 | 2.74 | 1.8 | 0.27 | 9.1 | 1.24 |
| RSDW20F-05<br>RSDW20G-05<br>RSDW20H-05 | 5.0 | 2.32 | 2.32 | 0 | 8.2 | 2.5 |
| RSDW20F-12<br>RSDW20G-12<br>RSDW20H-12 | 12.0 | 6.8 | 2.4 | 2.32 | 22 | 2.5 |
| RSDW20F-15<br>RSDW20G-15<br>RSDW20H-15 | 15.0 | 8.06 | 2.4 | 3.9 | 27 | 2.5 |

**2. The value of Rtrim-down defined as:**

$$R_{trim-down} = R1 \times \left(\frac{V_r \times R1}{(V_{o,nom} - V_o) \times R2} - 1\right) - Rt\ (K\Omega)$$

Where

$R_{trim-down}$ is the external resistor in Kohm.

$V_{o,nom}$ is the nominal output voltage.

$V_o$ is the desired output voltage.

R1, Rt, R2, R3 and Vr are internal to the unit and are defined in Table 1.

For example, to trim-down the output voltage of 5.0V module (RSDW20F-05) by 10% to 4.5V, R trim-down is calculated as follows:

$V_{o,nom} - V_o = 5.0 - 4.5 = 0.5V$

R1 = 2.32 KΩ

R2 = 2.32 KΩ

R3 = 0 KΩ

Rt = 8.2 KΩ

Vr = 2.5V

$$R_{trim-down} = 2.32 \times \left(\frac{2.5 \times 2.32}{0.5 \times 2.32} - 1\right) - 8.2 = 1.08\ (K\Omega)$$



LRI Distribuída no Brasil pela LRI | vendas@lri.com.br | 51 2129-3000

## ■ Mechanical Specification

- All dimensions in mm(inch)
- Tolerance:x.x±0.5mm(x.xx±0.02")
  x.xx±0.25mm(x.xxx±0.010")
- Pin size is:0.5±0.05mm (0.02"±0.002")

### ※F models(9~36Vin) and G models(18~75Vin):

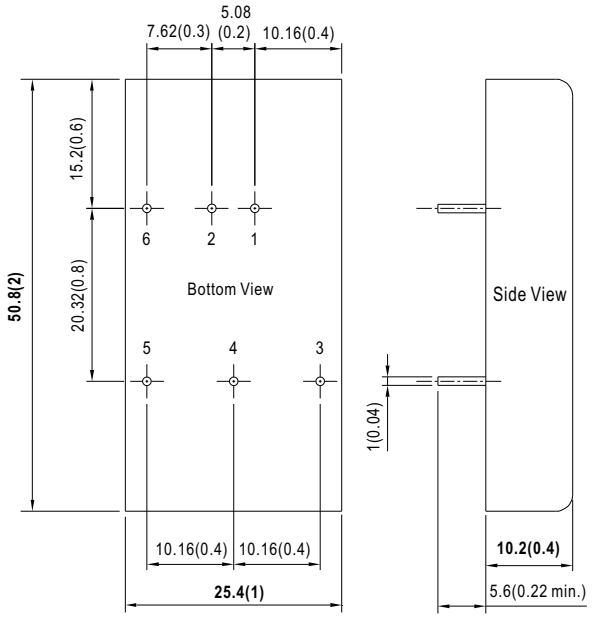


## ■ Plug Assignment

| Pin-Out | | |
|---|---|---|
| Pin No. | RSDW20F/G (Single output) | RDDW20F/G (Dual output) |
| 1 | +Vin | +Vin |
| 2 | -Vin | -Vin |
| 3 | +Vout | +Vout |
| 4 | Trim | Common |
| 5 | -Vout | -Vout |
| 6 | Remote ON/OFF | Remote ON/OFF |

### ※H models(43~160Vin):

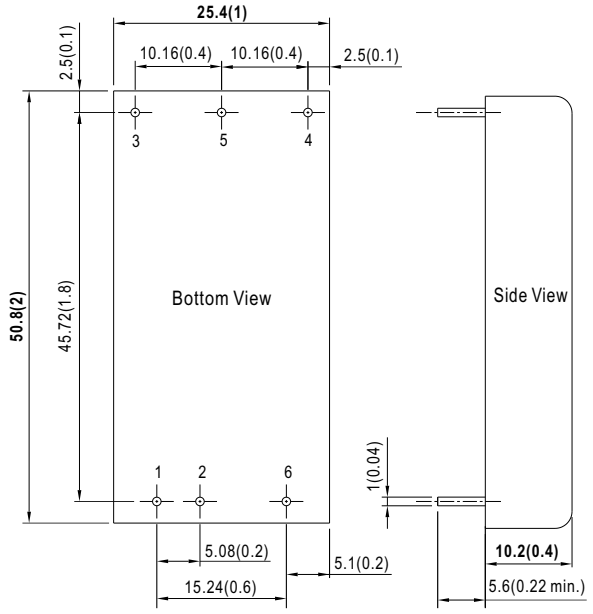


| Pin-Out | | |
|---|---|---|
| Pin No. | RSDW20H (Single output) | RDDW20H (Dual output) |
| 1 | +Vin | +Vin |
| 2 | -Vin | -Vin |
| 3 | +Vout | +Vout |
| 4 | Trim | -Vout |
| 5 | -Vout | Common |
| 6 | Remote ON/OFF | Remote ON/OFF |



LRI Distribuída no Brasil pela LRI | vendas@lri.com.br | 51 2129-3000

## ■ Derating Curve

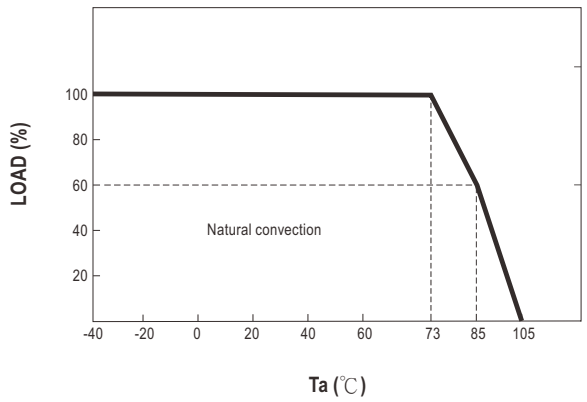


## ■ EMC Suggestion Circuit

**F models(9~36Vin) and G models(18~75Vin):**

※Comply to BS EN/EN55032 conducted Class A without additional componets, required external componets to meet BS EN/EN55032 conducted Class B emission are as below:

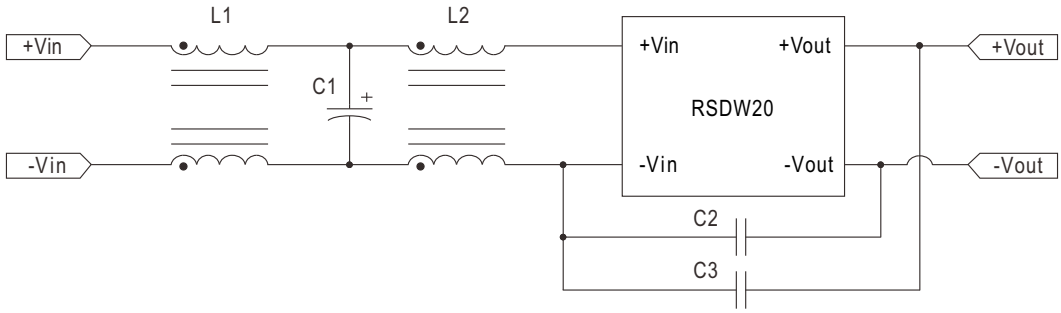


| Model No. | BS EN/EN55032 Class B | | | | |
|---|---|---|---|---|---|
| | C1 | C2 | C3 | L1 | L2 |
| RSDW20F-03 | 220μF/50V KY | 1000pF/2KV | 1000pF/2KV | SHORT | 1.2mH |
| RSDW20F-05 | 220μF/50V KY | 1000pF/2KV | 1000pF/2KV | SHORT | 1.2mH |
| RSDW20F-12 | 220μF/50V KY | 1000pF/2KV | 1000pF/2KV | SHORT | 1.2mH |
| RSDW20F-15 | 220μF/50V KY | 1000pF/2KV | 1000pF/2KV | SHORT | 1.2mH |
| RSDW20G-03 | 220μF/100V PW | 1000pF/2KV | 1000pF/2KV | 0.15mH | 1.2mH |
| RSDW20G-05 | 220μF/100V PW | 1000pF/2KV | 1000pF/2KV | 0.15mH | 1.2mH |
| RSDW20G-12 | 220μF/100V PW | 1000pF/2KV | 1000pF/2KV | 0.15mH | 1.2mH |
| RSDW20G-15 | 220μF/100V PW | 1000pF/2KV | 1000pF/2KV | 0.15mH | 1.2mH |

Note: C1 is NIPPON-CHEMICON KY series or NICHICON PW series aluminum capacitor
C2, C3 are ceramic capacitors

※Required external componets to meet BS EN/EN55032 conducted Class A emission are as below:

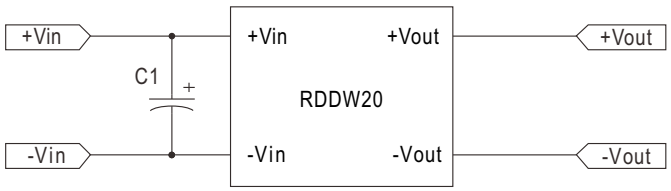


| Model No. | BS EN/EN55032 Class A |
|---|---|
| | C1 |
| RDDW20F-05 | 10μF/50V/MLCC 1210 |
| RDDW20F-12 | 10μF/50V/MLCC 1210 |
| RDDW20F-15 | 10μF/50V/MLCC 1210 |
| RDDW20G-05 | NC |
| RDDW20G-12 | NC |
| RDDW20G-15 | NC |



LRI Distribuída no Brasil pela LRI | vendas@lri.com.br | 51 2129-3000

**H models(43~160Vin):**

※Comply to BS EN/EN55032 conducted Class A without additional componets are as below:

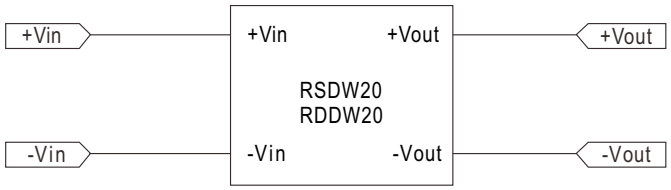


※Required external componets to meet BS EN/EN50121-3-2(BS EN/EN55011 Class A conducted & Radiated Emission) are as below:

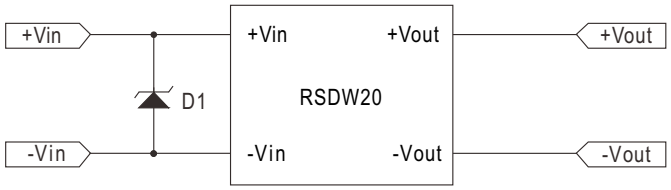


| Model No. | D1 |
|---|---|
| RSDW20H-05 | P6KE180A Littelfuse |
| RSDW20H-12 | P6KE180A Littelfuse |
| RSDW20H-15 | P6KE180A Littelfuse |



LRI Distribuída no Brasil pela LRI | vendas@lri.com.br | 51 2129-3000

## ■ Packing

| Standard Tube Packing | MPQ Per Tube (PCS) | One Tube G.W. | Max. Q'TY/ Carton(PCS) | One Carton G.W. |
|---|---|---|---|---|
| Unit : mm 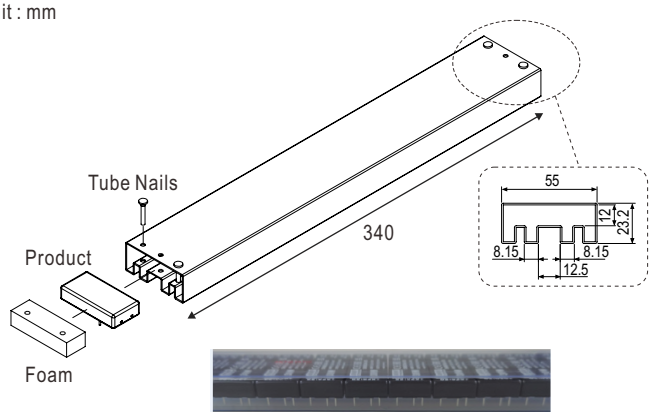   Tube pattern | 12 | 498g | 300 | 14.45Kg |

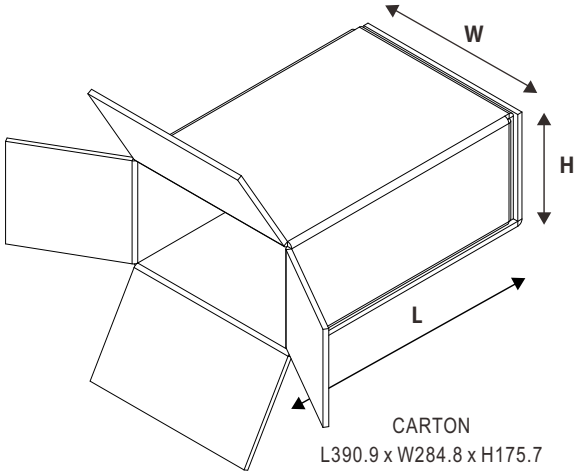


CARTON
L390.9 x W284.8 x H175.7

## ■ Installation Manual

Please refer to : http://www.meanwell.com/manual.html



LRI Distribuída no Brasil pela LRI | vendas@lri.com.br | 51 2129-3000