1000W with PFC and Parallel Function

PSPA-1000 series

User's Manual



R33100 RoHS | UL62368-1 | BS EN/EN62368-1 | TPTC004 | IEC62368-1

Automate | Industrial | Security | Network | Telecom

Features

- Universal AC input / Full range
- Built-in active PFC function
- Protections: Short circuit / Overload / Over voltage / Over temperature
- Forced air cooling by built-in DC fan
- Current sharing up to 4000W(3+1)
- With DC OK Signal output
- Built-in remote ON-OFF control
- Built-in remote sense function
- 5 years warranty

Applications

- Factory control or automation apparatus
- Test and measurement instrument
- Laser related machine
- Burn-in facility
- RF application

GTIN CODE

MW Search: https://www.meanwell.com/serviceGTIN.aspx

Description

PSPA-1000 series is a 1KW single output enclosed type AC/DC power supply. This series operates from 90~264VAC input voltage and offers models with different rated voltage ranging between 12V and 48V. Thanks to high efficiency up to 94% and built-in fan, the entire series is able to work for -20℃ ~ +70℃ ambient temperature. PSPA-1000 is equipped with various built-in functions, such as current sharing, remote ON-OFF control and remote sense, providing great design flexibility for different types of applications.

Model Encoding

PSPA - 1000 - 12

- 12 — Rated output voltage (12V/15V/24V/48V)
- 1000 — Rated wattage
- PSPA — Series name

Mean Well Brasil

Distribuída no Brasil pela LRI | vendas@lri.com.br | 51 2129-3000

SPECIFICATION

MODEL		PSPA-1000-12	PSPA-1000-15	PSPA-1000-24	PSPA-1000-48
OUTPUT	DC VOLTAGE	12V	15V	24V	48V
	RATED CURRENT	80A	64A	42A	21A
	CURRENT RANGE	0 ~ 80A	0 ~ 64A	0 ~ 42A	0 ~ 21A
	RATED POWER	960W	960W	1008W	1008W
	RIPPLE & NOISE (max.) Note.2	150mVp-p	150mVp-p	200mVp-p	250mVp-p
	VOLTAGE ADJ. RANGE	11 ~ 14V	14 ~ 17V	22 ~ 28V	46 ~ 56V
	VOLTAGE TOLERANCE Note.3	±2.0%	±1.5%	±1.0%	±1.0%
	LINE REGULATION	±0.5%	±0.5%	±0.5%	±0.5%
	LOAD REGULATION	±2.0%	±1.5%	±0.5%	±0.5%
	SETUP, RISE TIME	1000ms,50ms/115VAC 1000ms,50ms/230VAC			
	HOLD UP TIME (Typ.)	16ms at full load			
INPUT	VOLTAGE RANGE Note.4	90 ~ 264VAC(300VAC for 5 sec.) 127 ~ 370VDC			
	FREQUENCY RANGE	47 ~ 63Hz			
	POWER FACTOR (Typ.)	0.95/230VAC 0.99/115VAC at full load			
	EFFICIENCY(Typ.)	92%	93%	93.5%	94%
	AC CURRENT (Typ.)	8.5A/115VAC 5A/230VAC			
	INRUSH CURRENT (Typ.)	20A/115VAC 40A/230VAC			
	LEAKAGE CURRENT	<0.5mA/240VAC			
PROTECTION	OVERLOAD	105 ~ 135% rated output power			
		Protection type : Constant current limiting, recovers automatically after fault condition is removed			
	OVER VOLTAGE	14.5 ~ 16.5V	18.2 ~ 20.6V	29 ~ 33V	58 ~ 65V
		Protection type : Shut down o/p voltage, re-power on to recover			
	OVER TEMPERATURE	Shut down o/p voltage, re-power on to recover			
FUNCTION	CURRENT SHARING	Up to 4000W or (3+1) units. Please refer to the Function Manual.			
	REMOTE ON-OFF CONTROL	Power ON : short; Power OFF : open. Please refer to the Function Manual.			
	REMOTE SENSE	Compensate voltage drop on the load wiring up to 0.5V. Please refer to the Function Manual.			
	POK SIGNAL	The TTL signal out, PSU turn on = 2.4 ~ 5V ; PSU turn off = 0 ~ 0.4V. Please refer to the Function Manual.			
ENVIRONMENT	WORKING TEMP.	-20 ~ +70℃ (Refer to "Derating Curve")			
	WORKING HUMIDITY	20 ~ 90% RH non-condensing			
	STORAGE TEMP., HUMIDITY	-40 ~ +85℃, 10 ~ 95% RH non-condensing			
	TEMP. COEFFICIENT	±0.03%/℃ (0 ~ 50℃)			
	VIBRATION	10 ~ 500Hz, 2G 10min./1cycle, period for 60min. each along X, Y, Z axes			
SAFETY & EMC (Note 5)	SAFETY STANDARDS	UL62368-1, CAN/CSA C22.2 No. 62368-1, TUV BS EN/EN62368-1, BSMI CNS14336-1, AS/NZS62368.1, EAC TP TC 004 approved			
	WITHSTAND VOLTAGE	I/P-O/P:3KVAC I/P-FG:2KVAC O/P-FG:0.5KVAC			
	ISOLATION RESISTANCE	I/P-O/P, I/P-FG, O/P-FG:100M Ohms / 500VDC / 25℃/ 70% RH			
	EMC EMISSION	**Parameter**	**Standard**	**Test Level / Note**	
		Conducted	BS EN/EN55032 (CISPR32)	Class B	
		Radiated	BS EN/EN55032 (CISPR32)	Class B	
		Harmonic Current	BS EN/EN61000-3-2	Class A	
		Voltage Flicker	BS EN/EN61000-3-3	-----	
	EMC IMMUNITY	BS EN/EN55035, BS EN/EN61000-6-2, BSMI CNS13438			
		Parameter	**Standard**	**Test Level / Note**	
		ESD	BS EN/EN61000-4-2	Level 3, 8KV air ; Level 2, 4KV contact	
		Radiated	BS EN/EN61000-4-3	Level 3	
		EFT / Burst	BS EN/EN61000-4-4	Level 3	
		Surge	BS EN/EN61000-4-5	Level 4, 2KV/Line-Line 4KV/Line-Earth	
		Conducted	BS EN/EN61000-4-6	Level 3	
		Magnetic Field	BS EN/EN61000-4-8	Level 4	
		Voltage Dips and Interruptions	BS EN/EN61000-4-11	>95% dip 0.5 periods, 30% dip 25 periods, >95% interruptions 250 periods	
OTHERS	MTBF	807.1K hrs min. Telcordia SR-332 (Bellcore) ; 94.9K hrs min. MIL-HDBK-217F (25℃)			
	DIMENSION	170*120*93mm (L*W*H)			
	PACKING	1.93Kg ; 8pcs/16.4Kg/1.53CUFT			

NOTE

1. All parameters NOT specially mentioned are measured at 230VAC input, rated load and 25℃ of ambient temperature.
2. Ripple & noise are measured at 20MHz of bandwidth by using a 12" twisted pair-wire terminated with a 0.1uf & 47uf parallel capacitor.
3. Tolerance : includes set up tolerance, line regulation and load regulation.
4. Derating may be needed under low input voltages. Please check the derating curve for more details.
5. The power supply is considered a component which will be installed into a final equipment. All the EMC tests are been executed by mounting the unit on a 360mm*360mm metal plate with 1mm of thickness. The final equipment must be re-confirmed that it still meets EMC directives. For guidance on how to perform these EMC tests, please refer to “EMI testing of component power supplies.” (as available on https://www.meanwell.com//Upload/PDF/EMI_statement_en.pdf)
6. The ambient temperature derating of 3.5℃/1000m with fanless models and of 5℃/1000m with fan models for operating altitude higher than 2000m(6500ft).

※ Product Liability Disclaimer : For detailed information, please refer to https://www.meanwell.com/serviceDisclaimer.aspx

LRI Distribuída no Brasil pela LRI | vendas@lri.com.br | 51 2129-3000

■ Block Diagram

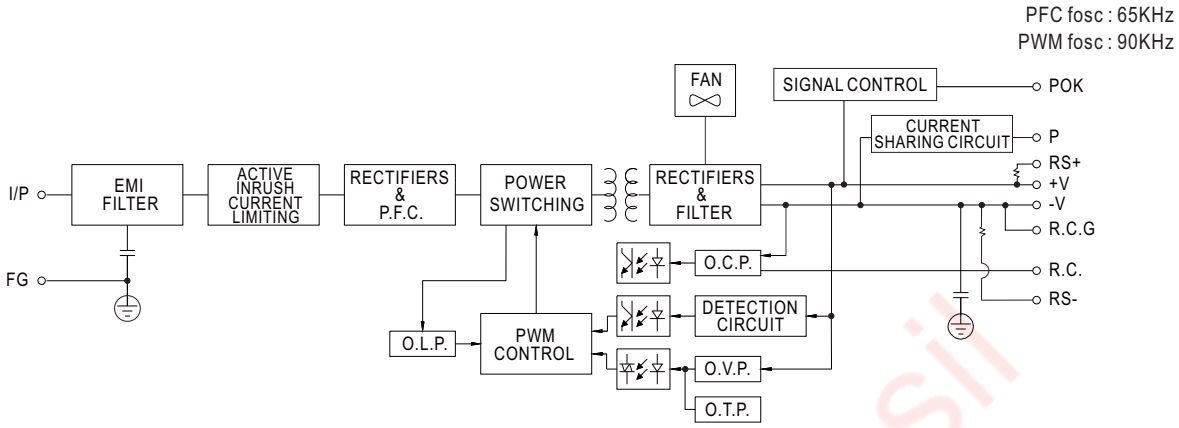

■ Derating Curve

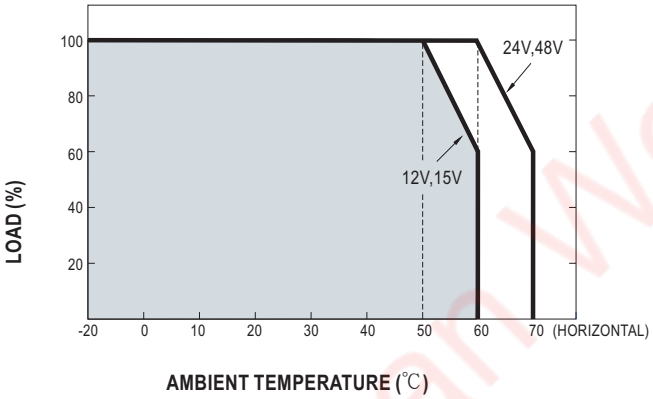

■ Output Derating VS Input Voltage

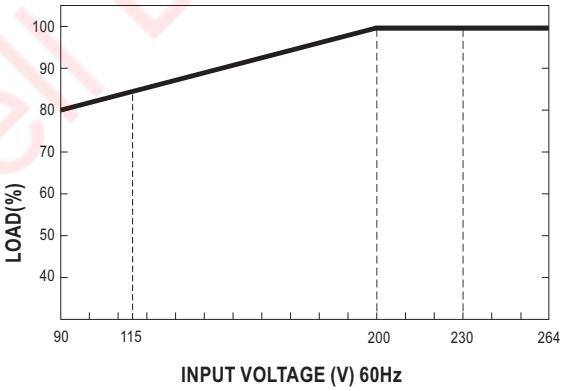

■ Function Manual

1.Remote Sense

※ The Remote Sense compensates voltage drop on the load wiring up to 0.5V.

※ The minimum load is 5% when Remote Sense functions.

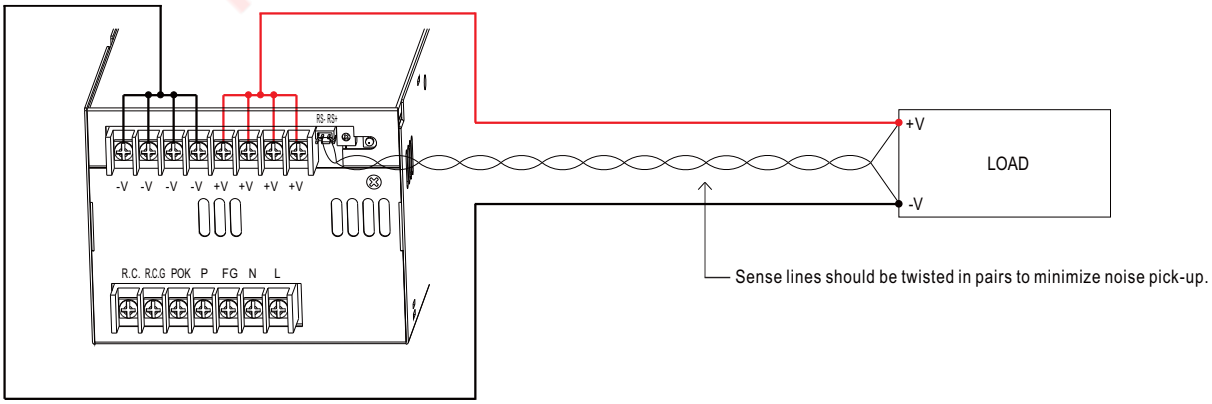

Mean Well Brasil

LRI Distribuída no Brasil pela LRI | vendas@lri.com.br | 51 2129-3000

2.Remote ON-OFF Control

※ The power supply can be turned ON-OFF individually or along with other units by using the "Remote ON-OFF" function.

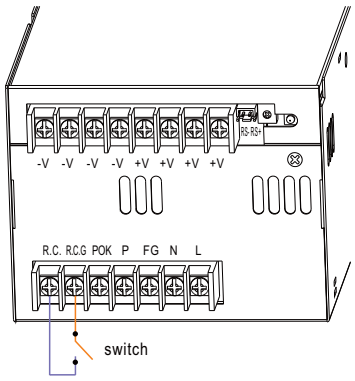

Between R.C. and R.C.G	Power Supply Status
Switch Short	ON
Switch Open	OFF

3.POK signal

※ POK signal indicates the output status of the power supply. It can operate in two ways : One is sinking current from external TTL signal ; the other is sending out a TTL voltage signal.

◎ **Sinking current from external TTL signal:** The maximum sink current is 10mA and the maximum external voltage is 5.6V.

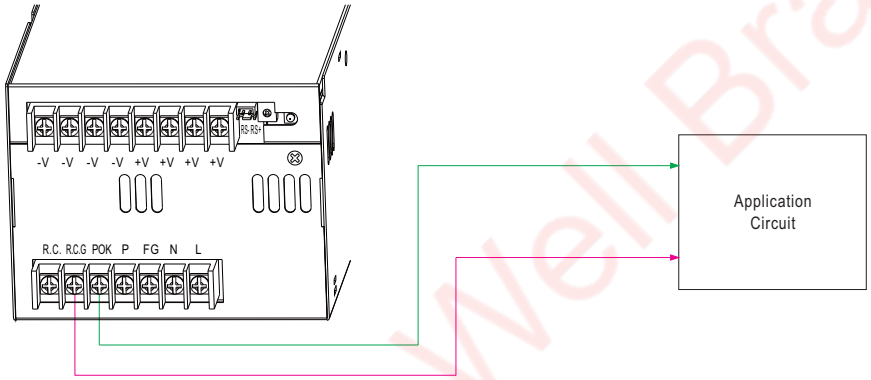

4.Current Sharing with Remote Sense

PSPA-1000 has the built-in active current sharing function and can be connected in parallel, up to 4 units, to provide higher output power as exhibited below :

※The power supplies should be paralleled using short and large diameter wiring and then connected to the load.

※ Difference of output voltages among parallel units should be less than 0.2V.

※ The total output current must not exceed the value determined by the following equation:

Maximum output current at parallel operation=(Rated current per unit)×(Number of unit)×0.9

※ When the total output current is less than 5% of the total rated current, or say (5% of Rated current per unit)×(Number of unit) the current shared among units may not be fully balanced.

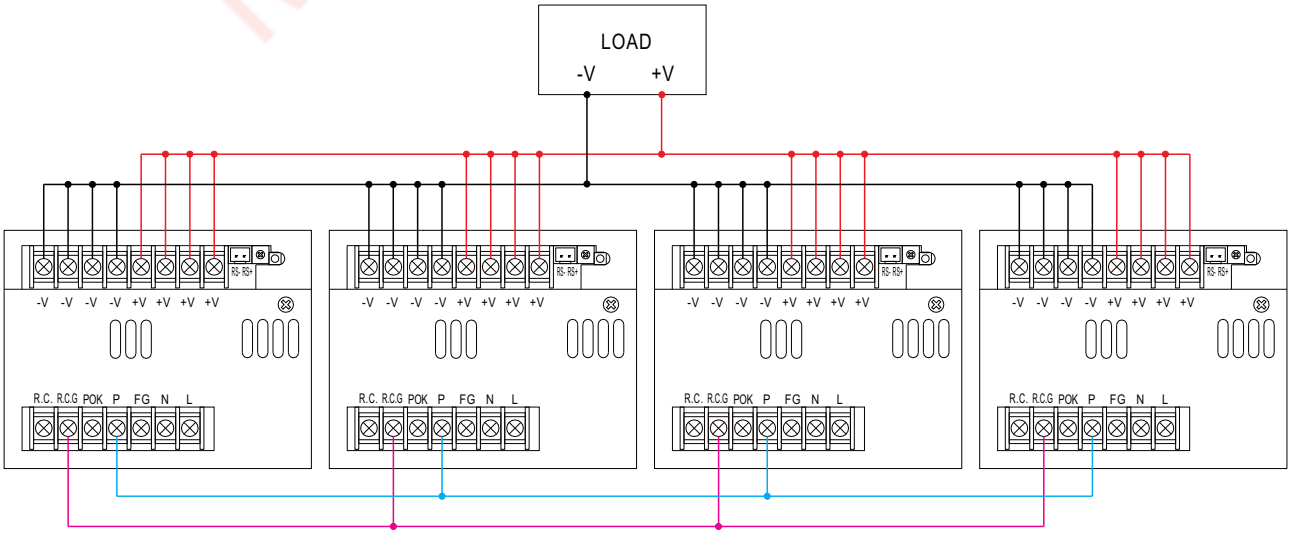

◎ For Remote Sense, please refer to "Remote Sense" section.

Mean Well Brasil

LRI Distribuída no Brasil pela LRI | vendas@lri.com.br | 51 2129-3000

■ Mechanical Specification

Case No.910A Unit:mm

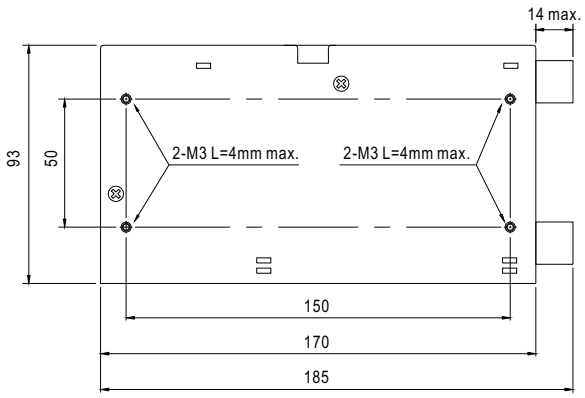

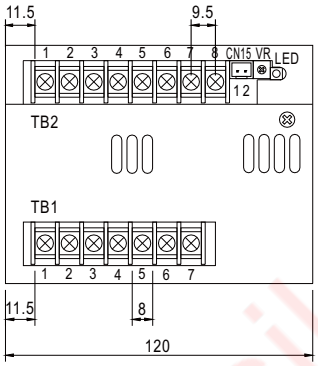

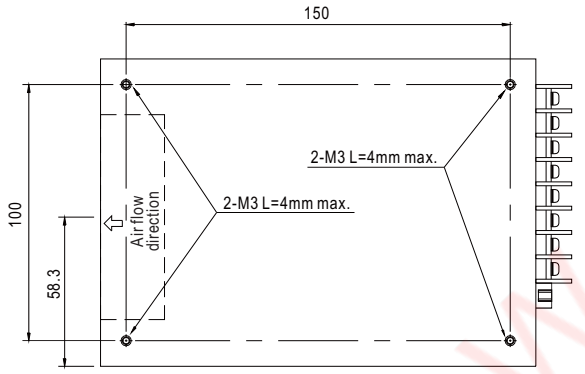

RS Connector(CN15) : JST B-XH or equivalent

Pin No.	Assignment	Mating Housing	Terminal
1	RS-	JST XHP or equivalent	JST SXH-001T or equivalent
2	RS+		

Terminal Pin No. Assignment(TB1)

Pin No.	Assignment
1	R.C.
2	R.C.G
3	POK
4	P(Current Share)
5	FG ⏚
6	AC/N
7	AC/L

Terminal Pin No. Assignment(TB2)

Pin No.	Assignment
1~4	DC OUTPUT -V
5~8	DC OUTPUT +V

※ Mounting Instruction

Recommended Screw Size	MAX. Penetration Depth L	Recommended mounting torque
M3	4mm	6~8Kgf-cm

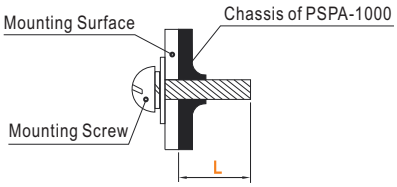

■ INSTALLATION MANUAL

Please refer to : http://www.meanwell.com/manual.html

Mean Well Brasil

LRI Distribuída no Brasil pela LRI | vendas@lri.com.br | 51 2129-3000