125W Triple Output with PFC Function

PPT-125 series





■ Features :

- Universal AC input / Full range
- Built-in active PFC function
- Protections: Short circuit / Overload / Over voltage
- PWM control and regulated
- High power density 6.117W/inch^3
- LED indicator for power on
- 100% full load burn-in test
- 125W with 18CFM FAN
- 5"x3" compact size
- 3 years warranty

User's Manual

■ GTIN CODE

MW Search: https://www.meanwell.com/serviceGTIN.aspx

AS/NZS62368-1 UL62368-1 BS EN/EN62368-1 IEC62368-1 TPTC004

SPECIFICATION

MODEL		PPT-125A			PPT-125B			PPT-125C			PPT-125D		
OUTPUT	OUTPUT NUMBER	CH1	CH2	CH3	CH1	CH2	CH3	CH1	CH2	CH3	CH1	CH2	CH3
	DC VOLTAGE	3.3V	5V	12V	5V	12V	-12V	5V	15V	-15V	5V	24V	12V
	RATED CURRENT	10A	8A	0.5A	11.5A	3A	0.5A	11A	2.5A	0.5A	7A	2.5A	0.5A
	CURRENT RANGE (convection)	1 ~ 10A	0.8 ~ 8A	0.05 ~ 0.5A	1 ~ 11.5A	0.3 ~ 3A	0.05 ~ 0.5A	1 ~ 11A	0.25 ~ 2.5A	0.05 ~ 0.5A	1 ~ 7A	0.25 ~ 2.5A	0.05 ~ 0.5A
	CURRENT RANGE (18CFM FAN)	1 ~ 12.5A	0.8 ~ 10A	0.05 ~ 0.63A	1 ~ 14.38A	0.3 ~ 3.75A	0.05 ~ 0.63A	1 ~ 13.75A	0.25 ~ 3.13A	0.05 ~ 0.63A	1 ~ 8.75A	0.25 ~ 3.13A	0.05 ~ 0.63A
	RATED POWER (convection)	79W			99.5W			100W			101W		
	RATED POWER (18CFM FAN)	98.81W			124.46W			125.15W			126.43W		
	RIPPLE & NOISE (max.) Note.2	100mVp-p	100mVp-p	120mVp-p	100mVp-p	120mVp-p	120mVp-p	100mVp-p	150mVp-p	150mVp-p	100mVp-p	240mVp-p	120mVp-p
	VOLTAGE ADJ. RANGE	CH1:3.13 ~ 3.46V			CH1:4.75 ~ 5.25V			CH1:4.75 ~ 5.25V			CH1:4.75 ~ 5.25V		
	VOLTAGE TOLERANCE Note.3	±3.0%	±5.0%	±6.0%	±3.0%	±5.0%	±6.0%	±3.0%	±5.0%	±6.0%	±3.0%	±5.0%	±6.0%
	LINE REGULATION	±0.5%	±0.5%	±0.5%	±0.5%	±0.5%	±0.5%	±0.5%	±0.5%	±0.5%	±0.5%	±0.5%	±0.5%
	LOAD REGULATION	±3.0%	±3.0%	±5.0%	±3.0%	±3.0%	±5.0%	±3.0%	±3.0%	±5.0%	±3.0%	±3.0%	±5.0%
	SETUP, RISE TIME	1000ms, 30ms/230VAC 2000ms, 30ms/115VAC at full load											
	HOLD UP TIME (Typ.)	24ms/230VAC 24ms/115VAC at full load											
INPUT	VOLTAGE RANGE	90 ~ 264VAC 127 ~ 370VDC											
	FREQUENCY RANGE	47~63Hz											
	POWER FACTOR (Typ.)	PF>0.93/230VAC PF>0.98/115VAC at full load											
	EFFICIENCY (Typ.)	75%			78%			78%			78%		
	AC CURRENT (Typ.)	1.7A/115VAC 0.75A/230VAC											
	INRUSH CURRENT (Typ.)	COLD START 24A/230VAC											
	LEAKAGE CURRENT	<2mA / 240VAC											
PROTECTION	OVERLOAD	130 ~ 160% rated output power											
		Protection type : Fold back current limiting, recovers automatically after fault condition is removed											
	OVER VOLTAGE	CH1:3.6 ~ 4.45V			CH1:5.75 ~ 6.75V			CH1:5.75 ~ 6.75V			CH1:5.75 ~ 6.75V		
		Protection type : Hiccup mode, recovers automatically after fault condition is removed											
ENVIRONMENT	WORKING TEMP., HUMIDITY	-20 ~ +70℃ (Refer to "Derating Curve")											
	WORKING TEMP.	20 ~ 90% RH non-condensing											
	STORAGE TEMP., HUMIDITY	-40 ~ +85℃, 10 ~ 95% RH											
	TEMP. COEFFICIENT	±0.05%/℃ (0 ~ 50℃)											
	VIBRATION	10 ~ 500Hz, 2G 10min./1cycle, 60min. each along X, Y, Z axes											
SAFETY & EMC (Note 4)	SAFETY STANDARDS	UL62368-1, TUV BS EN/EN62368-1, AS/NZS 62368.1 , EAC TP TC 004 approved											
	WITHSTAND VOLTAGE	I/P-O/P:3KVAC I/P-FG:2KVAC O/P-FG:0.5KVAC											
	ISOLATION RESISTANCE	I/P-O/P, I/P-FG, O/P-FG:100M Ohms / 500VDC / 25℃/ 70% RH											
	EMC EMISSION	Compliance to BS EN/EN55032 (CISPR32) Class B, BS EN/EN61000-3-2,-3, EAC TP TC 020											
	EMC IMMUNITY	Compliance to BS EN/EN61000-4-2,3,4,5,6,8,11, BS EN/EN55035, light industry level, EAC TP TC 020											
OTHERS	MTBF	2173.4K hrs min. Telcordia SR-332 (Bellcore) ; 269.9K hrs min. MIL-HDBK-217F (25℃)											
	DIMENSION	127*76.2*34.6mm (L*W*H)											
	PACKING	0.37Kg; 36pcs/14.3Kg/0.96CUFT											

NOTE

1. All parameters NOT specially mentioned are measured at 230VAC input, rated load and 25℃ of ambient temperature.
2. Ripple & noise are measured at 20MHz of bandwidth by using a 12" twisted pair-wire terminated with a 0.1 μF & 47 μF parallel capacitor.
3. Tolerance : includes set up tolerance, line regulation and load regulation.
4. The power supply is considered a component which will be installed into a final equipment. All the EMC tests are been executed by mounting the unit on a 360mm*360mm metal plate with 1mm of thickness. The final equipment must be re-confirmed that it still meets EMC directives. For guidance on how to perform these EMC tests, please refer to "EMI testing of component power supplies."
   (as available on https://www.meanwell.com//Upload/PDF/EMI_statement_en.pdf)
5. Heat Sink HS1,HS2 & HS3 can not be shorted.
6. The ambient temperature derating of 3.5℃/1000m with fanless models and of 5℃/1000m with fan models for operating altitude higher than 2000m(6500ft).

※ Product Liability Disclaimer : For detailed information, please refer to https://www.meanwell.com/serviceDisclaimer.aspx

LRI Distribuída no Brasil pela LRI | vendas@lri.com.br | 51 2129-3000

■ Mechanical Specification

(Unit: mm , tolerance ± 1mm)

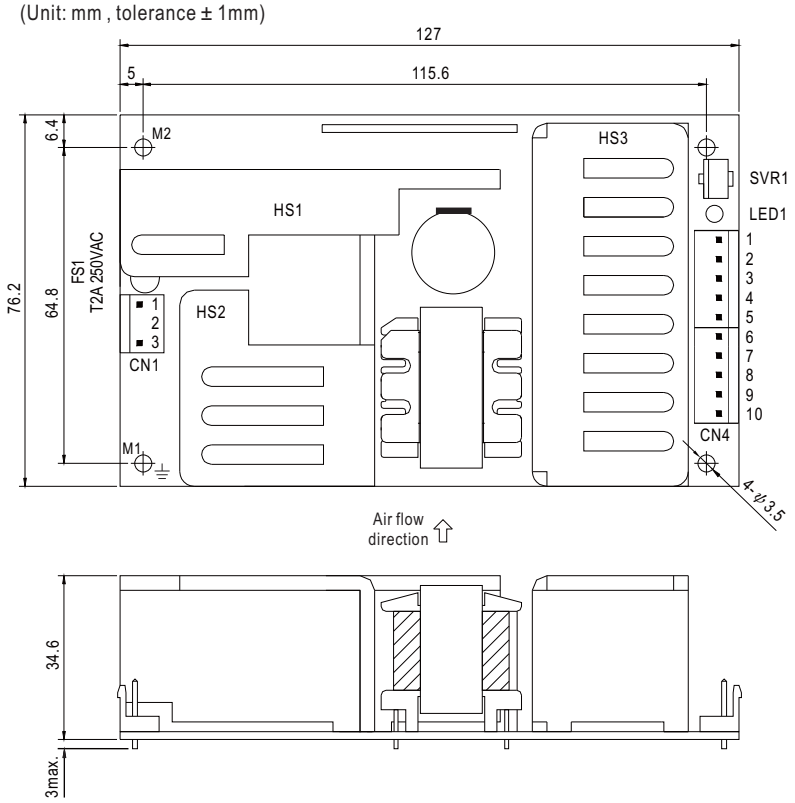

AC Input Connector (CN1) : JST B3P-VH or equivalent

Pin No.	Assignment	Mating Housing	Terminal
1	AC/L	JST VHR or equivalent	JST SVH-21T-P1.1 or equivalent
2	No Pin		
3	AC/N		

DC Output Connector (CN4) : JST B5P-VH*2 or equivalent

Pin No.	Assignment	Mating Housing	Terminal
1	CH3	JST VHR or equivalent	JST SVH-21T-P1.1 or equivalent
2,3	CH2		
4~8	GND		
9,10	CH1		

⏚ : Grounding Required

1.HS1,HS2 & HS3 cannot be shorted.
2.M1 is safety ground. For better EMC performance,Please secure an electrical connection between M1,M2 and chassis grounding.

■ Block Diagram

fosc : 100KHz

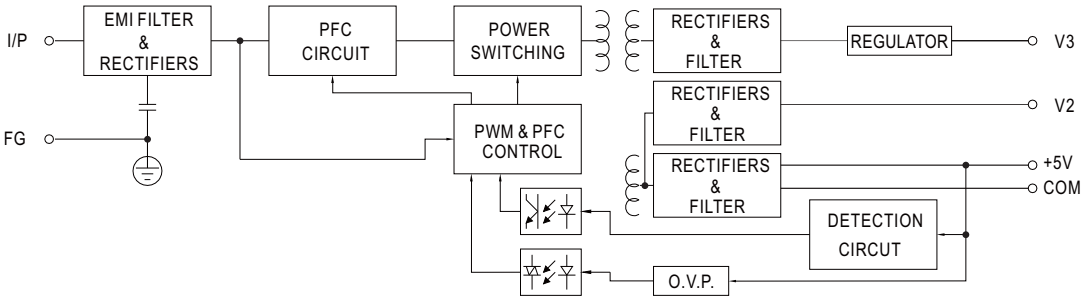

■ Derating Curve

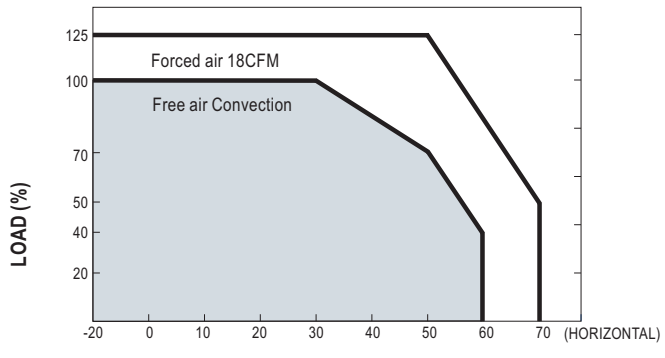

AMBIENT TEMPERATURE (℃)

■ Output Derating VS Input Voltage

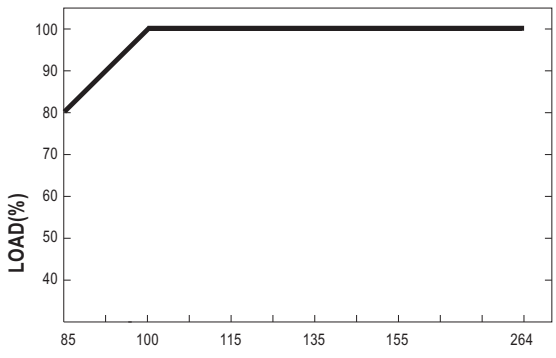

INPUT VOLTAGE (V) 60Hz

LRI Distribuída no Brasil pela LRI | vendas@lri.com.br | 51 2129-3000