Programmable Logic Controller with Open PLC Architecture PLC-DPLC series





Features

- Cost-effective Programmable Logic Controller
- Scalable through a wide range of compatible expansion modules
- Supports MODBus Communication protocol
- Easy DIN rail installation
- Compliant with the IEC 61131-3 international PLC standard

Applications

- Industrial Automation
- SMT Production Line Automation
- Smart Agriculture
- Elevator Control
- Building Automation Systems

Description

The PLC-DPLC is a new-generation Programmable Logic Controller manufactured by MEAN WELL. Its highly modular design allows users to customize functionality by adding expansion modules as needed. It is programmed with the OpenPLC Editor, which offers diverse function libraries for easy calling. This platform provides excellent versatility, program portability, and reusability, enabling rapid project deployment and simplified equipment maintenance. With support for the Modbus communication interface, it enables remote monitoring of on-site equipment and seamless integration with other devices.

Model Encoding

PLC - DPLC - 32 M T

- T(Transistor)
- M(Main Unit), E(Expansion Unit)
- I/O Points (Input/Output Points)
- Series name
- Product Category(PLC:Programmable Logic Controller)

SPECIFICATION	PLC-DPLC-32MT	PLC-DPLC-32ET
POWER SUPPLY		
RATED VOLTAGE	20.4~28.8VDC	
POWER	15W	
ENVIRONMENT		
WORKING TEMP.	0 ~ +55℃	
STORAGE TEMP.	-40 ~ +70℃	
AMBIENT HUMIDITY	5 ~ 95% RH non-condensing	
VIBRATION	5 ~ 150Hz, 2G 12min./1cycle, each along X, Y, Z axes according to EN50090-2-2	
FUNCTION		
DIGITAL INPUT	16 CHANNEL(4 CHANNEL,I1.0~I1.3, can be used as HIGH SPEED COUNTER/DIGIT INPUT)	16 CHANNEL
ANALOG INPUT	2 CHANNEL	4 CHANNEL
DIGITAL OUTPUT	16 CHANNEL(4 CHANNEL,Q0.0~Q0.3, can be used as HIGH SPEED PWM OUTPUT/DIGIT OUTPUT)	
CLOCK/CALENDAR	7 DAYS	-----
PROGRAM LANGUAGE	IEC 61131-3(LD, FBD, IL, ST, SFC)	-----
SAFETY & EMC	512K BYTES	-----
PROGRAM CAPACITY	MODBUS	-----
COMMUNICATION PROTOCOL		
SAFETY & STANDRDS	EN 61010-1:2010/A1:2019, EN IEC 61010-2-201:201	
WITHSTAND VOLTAGE	500 VAC FOR 1 MINUTE DIGIT INPUT AND OUTPUT TERMINALS POWER AND DIGIT INPUT FUNCTIONAL GROUND TERMINALS POWER AND OUTPUT FUNCTIONAL GROUND TERMINALS	
ISOLATION RESISTANCE	TEST VOLTAGE: 500 VDC 100 MΩ OR MORE DIGIT INPUT AND OUTPUT TERMINALS POWER AND DIGIT INPUT FUNCTIONAL GROUND TERMINALS POWER AND OUTPUT FUNCTIONAL GROUND TERMINALS	
EMC EMISSION	**Parameter** / **Standard** / **Test Level / Note**	
	Conducted / IEC61131-2 / Class A	
	Radiated / IEC61131-2 / Class A	
EMC IMMUNITY	IEC61131-2	
	Parameter / **Standard** / **Test Level / Note**	
	ESD / IEC61131-2 / Level 3,8KV air;Level 2,4KV,contact	
	Radiated / IEC61131-2 / Level 3,3V/m	
	EFT / Burst / IEC61131-2 / Level 3,2KV	
	Surge / IEC61131-2 / Level1,1KV/Line-Earth;Level 2, 1KV/Line-Line	
	Conducted / IEC61131-2 / Level 3,10V	
	Magnetic Field / IEC61131-2 / Level 4,30A/m	
OTHERS		
MTBF	200.9K hrs min. Telcordia SR-332 (Bellcore) ; 78.6K hrs min. MIL-HDBK-217F (25℃)	227.0K hrs min. Telcordia SR-332 (Bellcore) ; 83.3K hrs min. MIL-HDBK-217F (25℃)
DIMENSION	144*90*60.3mm (L*W*H)	144*90*58.3mm (L*W*H)
PACKING	0.36Kg; 30pcs/12Kg/1.35CUFT	

DIGITAL INPUT SPECIFICATION		PLC-DPLC-32MT	PLC-DPLC-32ET
NUMBER OF DIGITAL INPUTS		16 CHANNEL(4 CHANNEL,I1.0~I1.3, can be used as HIGH SPEED COUNTER/DIGIT INPUT)	16
INPUT FORM		SOURCE/SINK	
INPUT CURRENT		2.1mA	
RATED VALUE		24VDC	
ACTION LEVEL	OFF ⟶ ON	>15VDC	
	ON ⟶ OFF	<5VDC	
HIGH SPEED COUNTER		I1.0~I1.3(100KHz/4 groups、200KHz/single group)	
RESPONSE TIME		I1.0~I1.3 (HIGH SPEED COUNTER): 5μs/4 groups, 2.5μs/single group I0.0~I0.7, I1.4~I1.7(DIGITAL INPUT): One scan cycle (10ms~100msdepending on the number of expansion units)	I0.0~I1.7: One scan cycle (10ms~100ms depending on the number of expansion units)

ANALOG INPUT SPECIFICATION	PLC-DPLC-32MT	PLC-DPLC-32ET
NUMBER OF ANALOG INPUTS	2	4
INPUT RANGES	0 ~ +10VDC	
INPUT RESISTANCE	≧100KΩ	
RESOLUTION	12BIT	

DIGITAL OUTPUT SPECIFICATION	PLC-DPLC-32MT	PLC-DPLC-32ET
NUMBER OF DIGITAL OUTPUT	16 CHANNEL(4 CHANNEL,Q0.0~Q0.3, can be used as HIGH SPEED PWM OUTPUT/DIGIT OUTPUT)	
RATED VALUE	24VDC	
MAXIMUM LOAD	0.5A	
HIGH SPEED PWM OUTPUT	Q0.0~Q0.3(100KHz)	

■ Mechanical Specification

※ PLC-DPLC-32MT

Case No.DPLC (Unit:mm, tolerance ± 1mm)

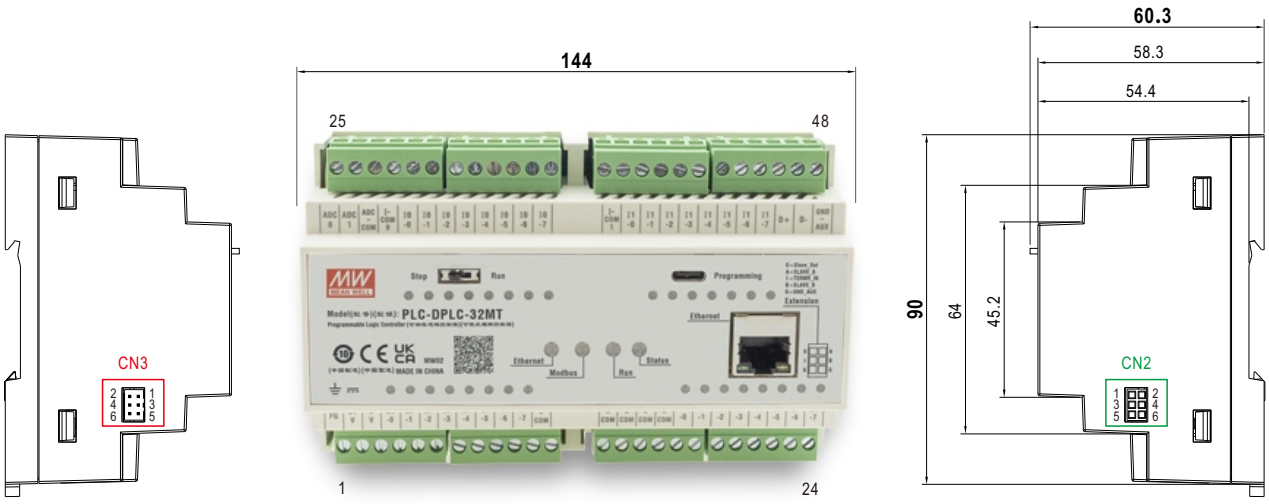

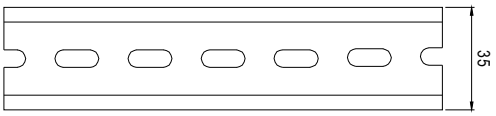

ADMISSIBLE DIN-RAIL:TS35/7.5 OR TS35/15

※ LED Status Indicators & Corresponding Signal at Function Pins

LED	Description
STATUS	System status
RUN	RUN/STOP
MOD	MODBus status
ETHERNET	Ethernet status
I	Digital input status
Q	Digital output status

※ Control Pin No. Assignment(CN2) : Samtec SSW-103-02-G-D-RA or equivalent



Mating Connectors	Samtec MTLW-103-10-G-D-385 or equivalent

Pin No.	Function	Description
1	DA	For Master/Slave model: Data line used in Master/Slave interface
2	Slave_OUT	For Slave model: Data line used in Slave Serial Number interface
3	DB	For Master/Slave model: Data line used in Master/Slave interface
4	TR_IN	For Slave model: Data line used in Slave Termination Resistor interface
5,6	GND_AUX	Isolated signal, referenced to GND-AUX for Master/Slave communication

※ Control Pin No. Assignment(CN3) : HRS DF11-6DP-2DS or equivalent(When multiple hosts are connected in parallel for communication, a short PIN must be connected to the CN3 port of the first and last host.)



Mating Housing	HRS DF11-6DS or equivalent
Terminal	HRS DF11-**SC or equivalent

Pin No.	Function	Description
1	TR+	Line used in Slave Termination Resistor interface
2	TR-	Line used in Slave Termination Resistor interface
3~6	NC	-----

※ IN/OUT Connector Pin No. Assignment :

Pin No.	Function	Description
1	FG	Power supply frame ground
2	+24V	Power supply 24V
3	0V	Power supply 0V
4~7	Q0.0~Q0.3	PWM output
8~11, 17~24	Q0.4~Q1.7	Digital output
12~16	Q-COM	Common for Q
25	ADC0	Analog input 0
26	ADC1	Analog input 1
27	ADC-COM	Analog common
28	I-COM0	Common for I0.0~I0.7
29~36, 42~45	I0.0~I0.7; I1.4~I1.7	Digital Input
37	I-COM1	Common for I1.0~I1.7
38~41	I1.0~I1.3	High speed counter
46	D+	For MODBus model: Data line used in MODBus interface
47	D-	For MODBus model: Data line used in MODBus interface
48	GND-AUX	Isolated signal, referenced to GND-AUX for MODBus communication

LRI Distribuída no Brasil pela LRI | vendas@lri.com.br | 51 2129-3000

■ Mechanical Specification

※ PLC-DPLC-32ET

Case No.DPLC (Unit:mm, tolerance ± 1mm)

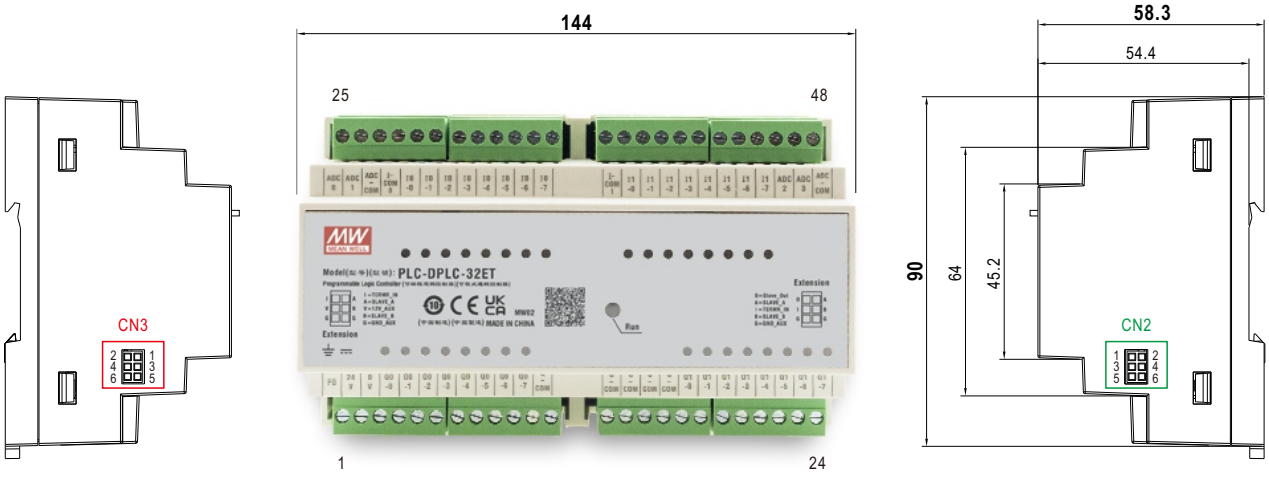

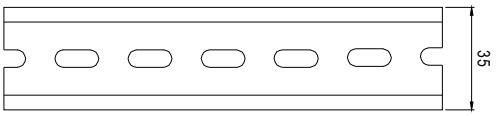

ADMISSIBLE DIN-RAIL:TS35/7.5 OR TS35/15

※ LED Status Indicators & Corresponding Signal at Function Pins

LED	Description
RUN	RUN/STOP
I	Digital input status
Q	Digital output status

※ Control Pin No. Assignment(CN2) : Samtec SSW-103-02-G-D-RA or equivalent



Mating Connectors	Samtec MTLW-103-10-G-D-385 or equivalent

Pin No.	Function	Description
1	DA	For Master/Slave model: Data line used in Master/Slave interface
2	Slave_OUT	For Slave model: Data line used in Slave Serial Number interface
3	DB	For Master/Slave model: Data line used in Master/Slave interface
4	TR_IN	For Slave model: Data line used in Slave Termination Resistor interface
5,6	GND_AUX	Isolated signal, referenced to GND-AUX for Master/Slave communication

LRI Distribuída no Brasil pela LRI | vendas@lri.com.br | 51 2129-3000

※ Control Pin No. Assignment(CN3) : Samtec SSW-103-02-G-D-RA or equivalent



Mating Connectors	Samtec MTLW-103-10-G-D-385 or equivalent

Pin No.	Function	Description
1	DA	For Master/Slave model: Data line used in Master/Slave interface
2	Slave_IN	For Slave model: Data line used in Slave Serial Number interface
3	DB	For Master/Slave model: Data line used in Master/Slave interface
4	TR_OUT	For Slave model: Data line used in Slave Termination Resistor interface
5,6	GND_AUX	Isolated signal, referenced to GND-AUX for MODBus communication

※ IN/OUT Connector Pin No. Assignment :

Pin No.	Function	Description
1	FG	Power supply frame ground
2	+24V	Power supply 24V
3	0V	Power supply 0V
4~7	Q0.0~Q0.3	PWM output
8~11, 17~24	Q0.4~Q1.7	Digital output
12~16	Q-COM	Common for Q
25	ADC0	Analog input 0
26	ADC1	Analog input 1
27,48	ADC-COM	Analog common
28	I-COM0	Common for I0.0~I0.7
29~36, 38~45	I0.0~I1.7	Digital Input
37	I-COM1	Common for I1.0~I1.7
46	ADC2	Analog input 2
47	ADC3	Analog input 3

■ Wiring Configuration

1.PWM/Digital Output Q
Q0.0-Q0.7 and Q1.0-Q1.7,Q_COM

Sinking Output Connection:

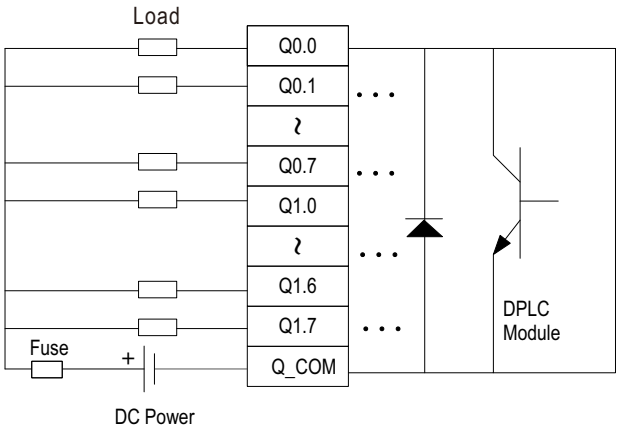

Pin No.	Function	Description
4~7	Q0.0~Q0.3	PWM output
8~11,17~24	Q0.4~Q1.7	Digital output
12~16	Q_COM	Common for Q

2. PWM/Digital Input I
I0.0-I0.7 and I_COM0 ,I1.0-I1.7 and I_COM1

Sinking Input Connection:

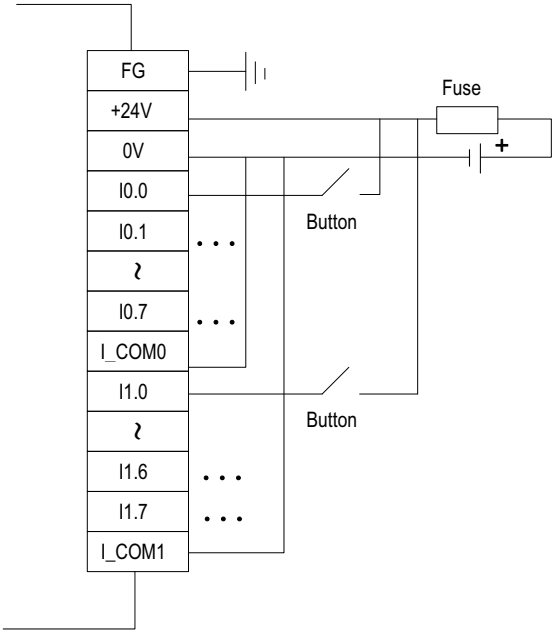

Source Input Connection:

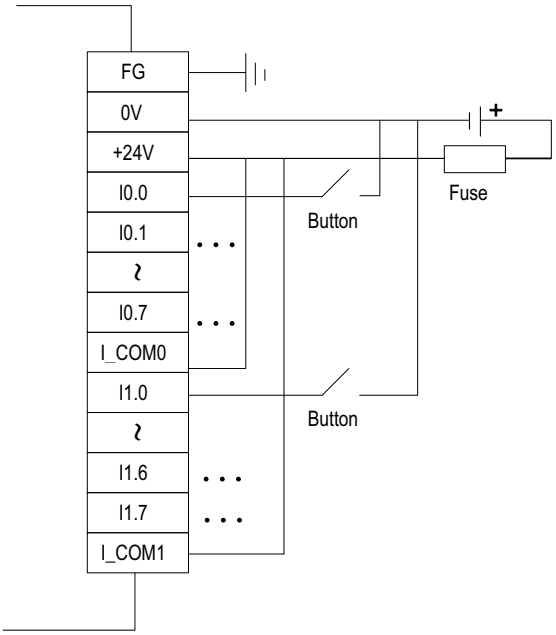

Pin No.	Function	Description
28	I_COM0	Common for I0.0~I0.7
29~36	I0.0~I0.7	Digital input
37	I_COM1	Common for 1.0~I1.7
38~41	I1.0~I1.3	HSC input
42~45	I1.4~I1.7	Digital input

3. Analog Input ADC
ADC0,ADC1 and ADC_COM

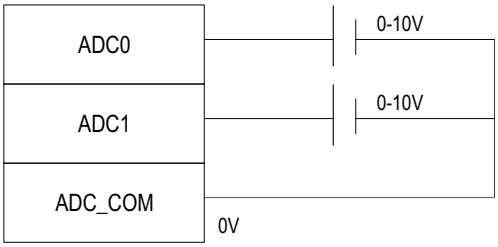

Pin No.	Function	Description
25	ADC0	Analog input 0
26	ADC1	Analog input 1
27	ADC_COM	Analog common

4.Supports MODBus communication

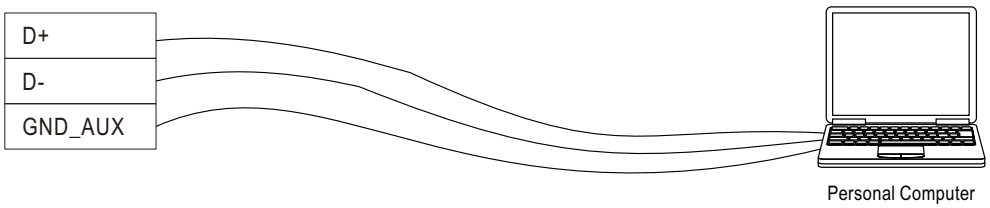

Pin No.	Function	Description
46	D+	For MODBus model: Data line used in MODBus interface
47	D-	For MODBus model: Data line used in MODBus interface
48	GND_AUX	Isolated signal, referenced to GND-AUX for MODBus communication

5.Supports parallel function

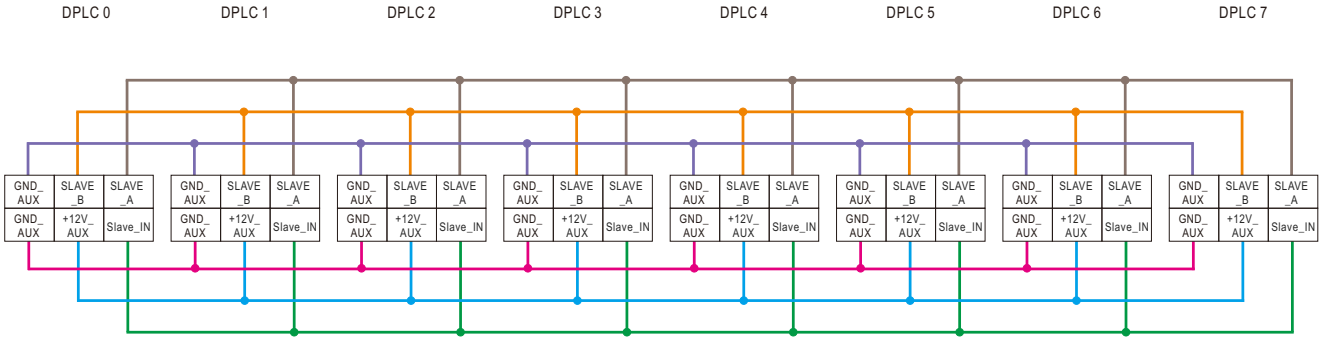

■ LED Status Indictors

Main Unit：

Indicator	Green	Orange	Red
Status Indicator	Light System Abnormal Flash Storage Operation		
Run Indicator	Light Normal Operation Flash stop Status	Light Expansion Unit Disconnected Flash Programming Mode	Light Program Execution Abnormal
MODBus Indicator	Light Communicating		Light Communication Abnormal
Ethernet Indicator	Light Communicating		Light Communication Abnormal

Expansion Unit：

Indicator	Green	Orange	Red
Run Indicator	Light Address Judgment Completed	Light Address Judgment in Progress	Light Communication Abnormal