# 16W Single Output AC Dimmable LED Power Supply PCD-16 series



## Features :

- AC phase-cut dimming
- Work with leading edge and trailing edge TRIAC dimmers
- 115VAC or 230VAC models available
- Built-in active PFC function
- Constant current design
- Protections: Short circuit / Over temperature
- Cooling by free air convection
- Fully isolated plastic case
- IP42 design
- Class Ⅱ power unit, no FG
- Class 2 power unit
- Suitable for LED related fixture or appliance (such as LED Decoration or Advertisement devices)
- 100% full load burn-in test
- Low cost
- High reliability
- 3 years warranty

User's Manual Click Me

## GTIN CODE

MW Search: https://www.meanwell.com/serviceGTIN.aspx

SELV IP42 ( for B type only) ( for A type only) ( for B type only) IS 15885(Part 2/Sec13) R-41027766 ( for 350B,700B only) (optional) ( for B type only) ( for B type only) ( for B type only)

PCD-16-350 A  A : With AC input 90~ 135VAC.
B : With AC input 180~ 295VAC.

## SPECIFICATION

| MODEL | | | PCD-16-350 ☐ | PCD-16-700 ☐ | PCD-16-1050 ☐ | PCD-16-1400 ☐ |
|---|---|---|---|---|---|---|
| OUTPUT | RATED CURRENT | | 350mA | 700mA | 1050mA | 1400mA |
| | OPERATING VOLTAGE RANGE | | 24 ~ 48V | 16 ~ 24V | 12 ~ 16V | 8 ~ 12V |
| | CURRENT ACCURACY | | ±5.0% | | | |
| | RATED POWER | | 16.8W | 16.8W | 16.8W | 16.8W |
| | RIPPLE & NOISE (max.) Note.1 | | 4.6Vp-p | 2.7Vp-p | 2.2Vp-p | 2Vp-p |
| | NO LOAD OUTPUT VOLTAGE (max.) | | 60V | 35V | 25V | 16V |
| | SETUP TIME | | 500ms / 230VAC 2000ms / 115VAC at full load | | | |
| INPUT | FREQUENCY RANGE | | 47 ~ 63Hz | | | |
| | POWER FACTOR (Typ.) | | PF>0.9/115VAC, PF>0.9/230VAC, PF>0.9/277VAC at full load (Please refer to "Power Factor Characteristic" curve) | | | |
| | TOTAL HARMONIC DISTORTION | A series | THD< 20% when output loading≧70% at 115VAC | | | |
| | | B series | THD< 20% when output loading≧70% at 230VAC input and output loading≧80% at 277VAC input | | | |
| | EFFICIENCY (Typ.) | | 82% | 81% | 80.5% | 80% |
| | AC CURRENT (Typ.) | | 0.4A/115VAC 0.2A/230VAC 0.15A/277VAC | | | |
| | INRUSH CURRENT(max.) | | COLD START 10A($t_{width}$=90μs measured at 50% $I_{peak}$) at 115VAC / 230VAC | | | |
| | MAX. No. of PSUs on 16A CIRCUIT BREAKER | A series | 58 units (circuit breaker of type B) / 58 units (circuit breaker of type C) at 115VAC | | | |
| | | B series | 128 units (circuit breaker of type B) / 128 units (circuit breaker of type C) at 230VAC | | | |
| | LEAKAGE CURRENT | | <0.5mA / 120VAC / 240VAC | | | |
| PROTECTION | SHORT CIRCUIT | | Hiccup mode, recovers automatically after fault condition is removed. | | | |
| | OVER TEMPERATURE | | Shut down o/p voltage, re-power on to recover | | | |
| ENVIRONMENT | WORKING TEMP. | | -30 ~ +60℃ (Refer to "Derating Curve") | | | |
| | WORKING HUMIDITY | | 20 ~ 95% RH non-condensing | | | |
| | STORAGE TEMP., HUMIDITY | | -40 ~ +80℃, 10 ~ 95% RH | | | |
| | TEMP. COEFFICIENT | | ±0.03%/℃ (0 ~ 50℃) | | | |
| | VIBRATION | | 10 ~ 500Hz, 2G 12min./1cycle, period for 72min. each along X, Y, Z axes | | | |
| SAFETY & EMC | SAFETY STANDARDS | | UL8750, CSA C22.2 No. 250.0-08, ENEC BS EN/EN613471, BS EN/EN61347-2-13, BS EN/N62384(for B type only), BIS IS15885(for 350B,700B only),EAC TP TC 004, IP42 approved ; design refer to UL60950-1, BS EN/EN61347-1, BS EN/EN61347-2-13 | | | |
| | WITHSTAND VOLTAGE | | I/P-O/P:3.75KVAC | | | |
| | ISOLATION RESISTANCE | | I/P-O/P:100M Ohms / 500VDC / 25℃/ 70% RH | | | |
| | EMC EMISSION | | Compliance to BS EN/EN55015 (B type only), BS EN/EN61000-3-2 Class C ; BS EN/EN61000-3-3, FCC part 18 non-consumer equipment (A type only), EAC TP TC 020 | | | |
| | EMC IMMUNITY | | Compliance to BS EN/EN61000-4-2,3,4,5,6,8,11, BS EN/EN55024,BS EN/EN61547, light industry level, EAC TP TC 020 | | | |
| OTHERS | MTBF | | 6624.6K hrs min. Telcordia SR-332 (Bellcore) 906.5Khrs min. MIL-HDBK-217F (25℃) | | | |
| | DIMENSION | | 84*57*29.5mm (L*W*H) | | | |
| | PACKING | | 0.19Kg; 72pcs/14.7Kg/0.92CUFT | | | |

NOTE

1. Ripple & noise are measured at 20MHz of bandwidth by using a 12" twisted pair-wire terminated with a 0.1uf & 47uf parallel capacitor.
2. Direct connecting to LEDs is suggested, but is not suitable for using additional drivers.
3. To fulfill requirements of the latest ErP regulation for lighting fixtures, this LED power supply can only be used behind a switch without permanently connected to the mains.
4. The ambient temperature derating of 3.5℃/1000m with fanless models and of 5℃/1000m with fan models for operating altitude higher than 2000m(6500ft).
5. For any application note and IP water proof function installation caution, please refer our user manual before using. https://www.meanwell.com/Upload/PDF/LED_EN.pdf

※ Product Liability Disclaimer : For detailed information, please refer to https://www.meanwell.com/serviceDisclaimer.aspx



LRI Distribuída no Brasil pela LRI | vendas@lri.com.br | 51 2129-3000

## ■ Mechanical Specification

Case No.PCD16A Unit:mm Tolerance:±1

**A Type:(PCD-16-_A)**

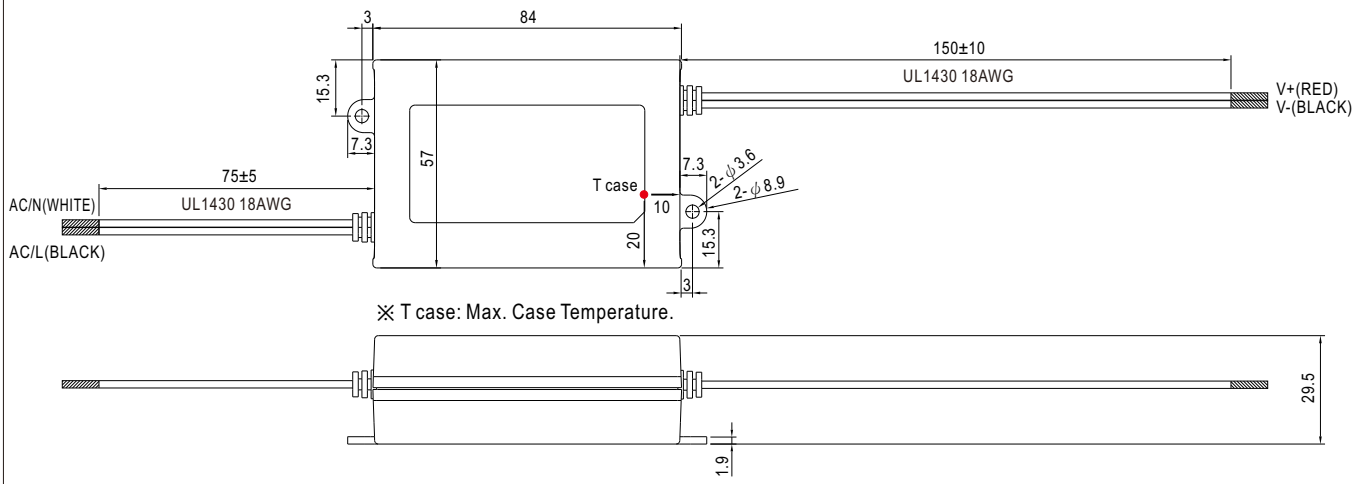


**B Type:(PCD-16-_B)**

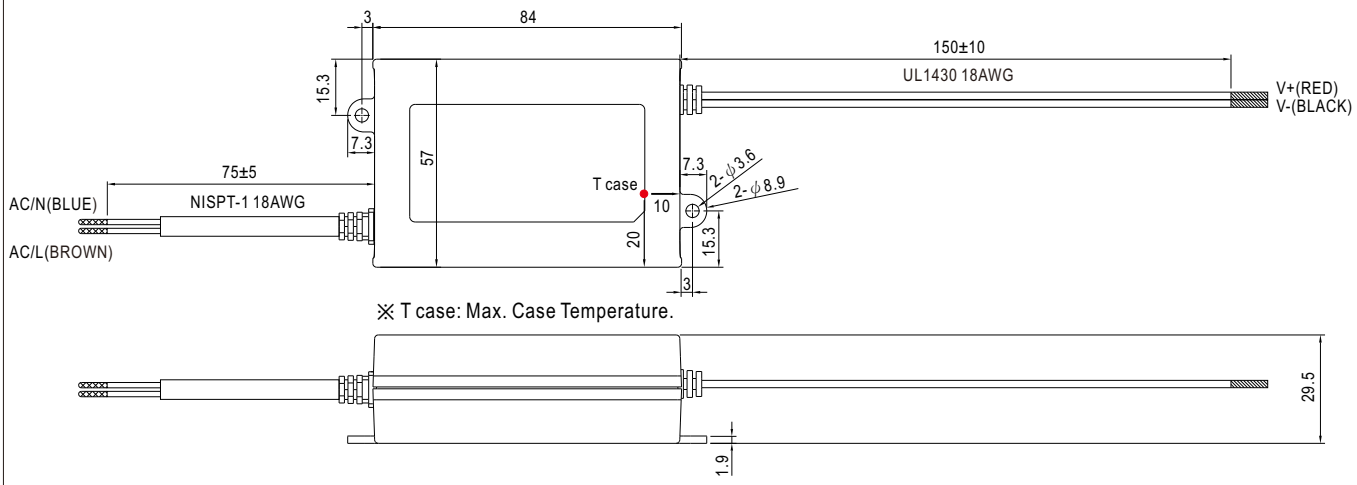


## ■ Block Diagram

fosc : 90KHz(115VAC)
120KHz(230VAC)

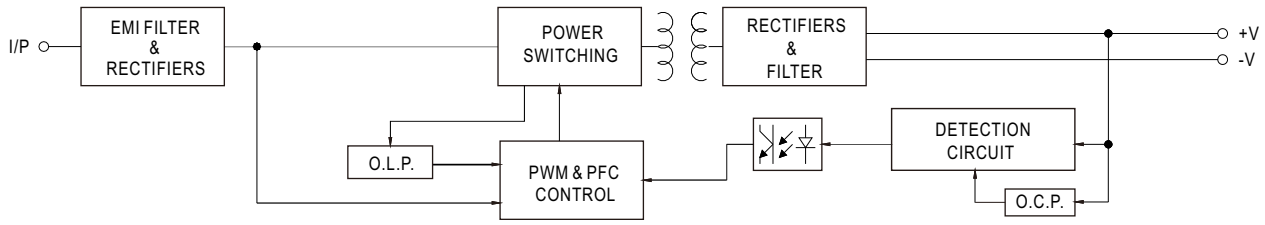




LRI Distribuída no Brasil pela LRI | vendas@lri.com.br | 51 2129-3000

## ■ Derating Curve

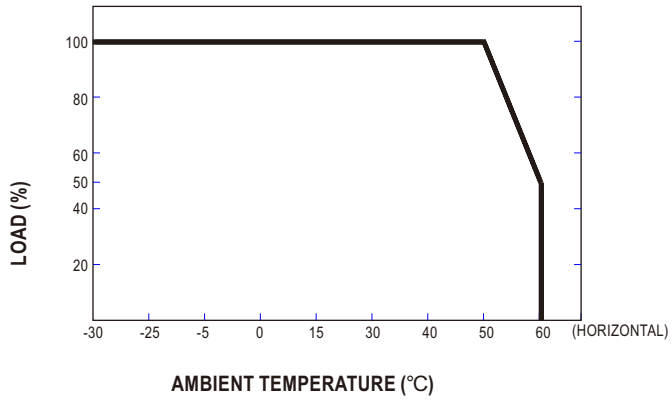


## ■ Static Characteristics

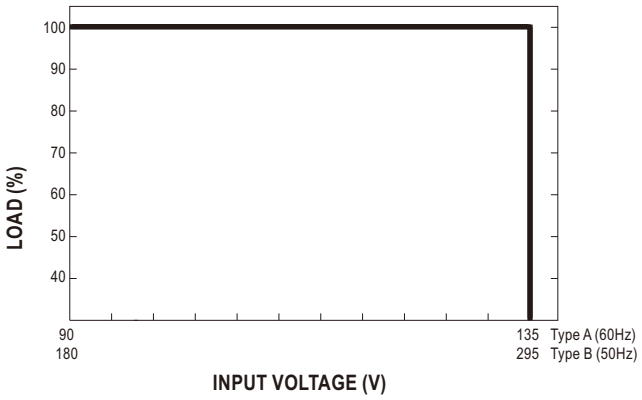


## ■ Power Factor Characteristic

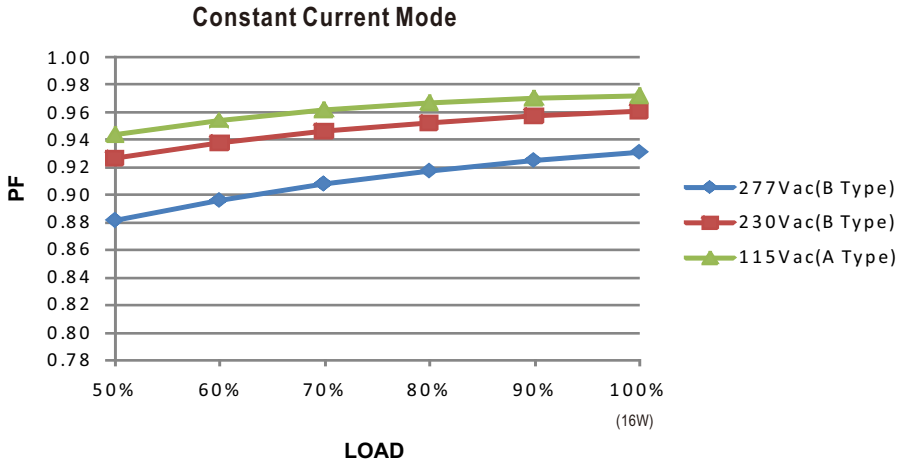


## ■ EFFICIENCY vs LOAD (PCD-16-350)

PCD-16 series possess superior working efficiency that up to 86% can be reached in field applications.

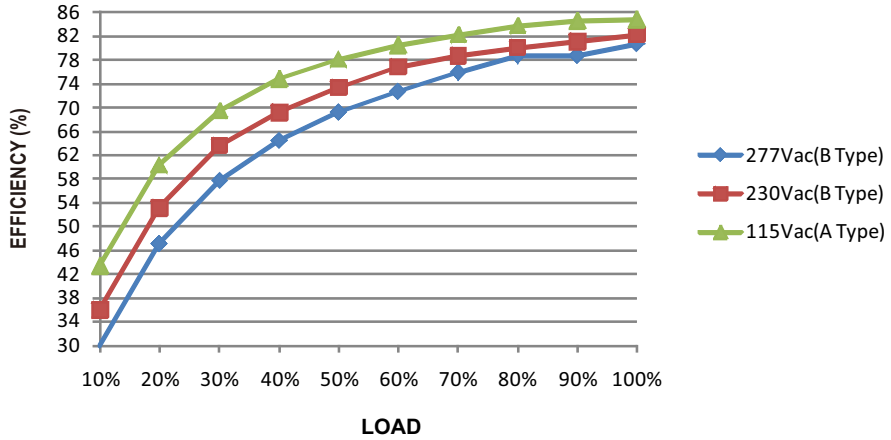




LRI Distribuída no Brasil pela LRI | vendas@lri.com.br | 51 2129-3000

## ■ AC Dimming Operation

◎ The following diagram depicts a typical installation utilizing the PCD-16 :

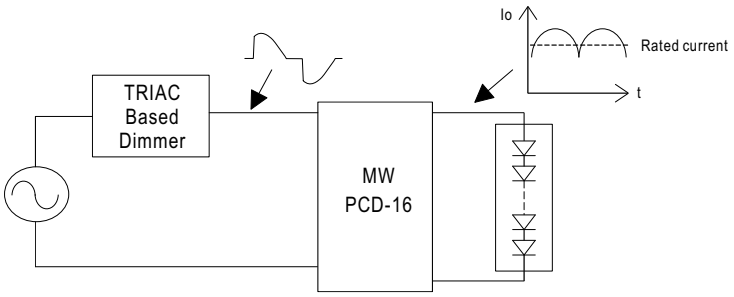


Under direct driving, the power supply will work in "constant current mode (CC)" and output voltage of the power supply will be clamped by sum of forward voltage ($V_F$) of the LED strip.

◎ Dimmer Compatibility Chart

| Manufacturer | Dimmer Model | |
|---|---|---|
| LUTRON | SKYLARK SF-12P-277 | (277VAC / 60Hz) |
| LUTRON | DVF-103P-277 | (277VAC / 60Hz) |
| LUTRON | SKYLARK SF-10P | (120VAC / 60Hz) |
| LUTRON | SKYLARK S-600P | (120VAC / 60Hz) |
| LUTRON | SKYLARK DVF-103P | (120VAC / 60Hz) |
| LEVITON | ILLUMATECH TM Cat.No.IP106 | (120VAC / 60Hz) |
| LEVITON | SURESLIDE TM Cat.No.6633-P | (120VAC / 60Hz) |
| LEVITON | SURESLIDE TM Cat. NO.6615-P | (120VAC / 60Hz) |
| JUNG | Licht-Management 225 TDE | (230VAC / 50Hz) |
| JUNG | Licht-Management 225 NV DE | (230VAC / 50Hz) |
| BERKER | Tronic-Drehdimmer 286710 | (230-240VAC / 50Hz) |
| Bodo Ehmann LICHTREGLER | T39.01 | (230VAC / 50Hz) |
| CLIPSAL | 32E450UDM | (220-240VAC / 50Hz) |
| CLIPSAL | NO 32E450TM | (220-240VAC / 50Hz) |

Conduction angle: 30 degrees(min.) / 180 degrees(max.)



LRI Distribuída no Brasil pela LRI | vendas@lri.com.br | 51 2129-3000