600W Intelligent Single Output Battery Charger — PB-600 series



Features :

- Charger for lead-acid batteries (flooded, Gel and AGM) and Li-ion batteries (lithium iron and lithium manganese) (Note.1)
- 2/3/8 stage charging (Note 5)
- Built-in battery rescue function
- Controlled by microprocessor
- Universal AC input / Full range
- Built-in active PFC function PF>0.95
- Protection: Reverse polarity / Short circuit / Over voltage / Over temperature
- 3 color LED loading indicator
- Built-in remote ON-OFF control
- Built-in temperature compensation function
- Built-in fan speed control (depends on charging current)
- 3 years warranty

User's Manual

GTIN CODE

MW Search: https://www.meanwell.com/serviceGTIN.aspx

UL1012 BS EN/EN62368-1 (for 48V only) BS EN/EN60335-1 (for 12V,24V only) TPTC004

SPECIFICATION

MODEL		PB-600-12	PB-600-24	PB-600-48
OUTPUT	BOOST CHARGE VOLTAGE Vboost	14.4V	28.8V	57.6V
	FLOAT CHARGE VOLTAGE Vfloat	13.8V	27.6V	55.2V
	RECOMMENDED BATTERY CAPACITY(AMP HOURS)(Note 4)	135 ~ 400AH	70 ~ 210AH	35 ~ 105AH
	BATTERY TYPE	Open & Sealed Lead Acid		
	OUTPUT CURRENT	40A	21A	10.5A
INPUT	VOLTAGE RANGE	90 ~ 264VAC 127 ~ 370VDC		
	FREQUENCY RANGE	47 ~ 63Hz		
	POWER FACTOR (Typ.)	0.95/230VAC 0.98/115VAC at full load		
	EFFICIENCY (Typ.)	86%	87%	89%
	AC CURRENT (Typ.)	6.8A/115VAC 3.4A/230VAC		
	INRUSH CURRENT (Typ.)	25A/115VAC 50A/230VAC		
	LEAKAGE CURRENT	<3.5mA / 240VAC		
PROTECTION	OVER VOLTAGE	16 ~ 18V	32 ~ 35V	64.5 ~ 69.5V
		Protection type : Shut down o/p voltage, re-power on to recover		
	OVER TEMPERATURE	Protection type : Shut down o/p voltage, recovers automatically after temperature goes down		
FUNCTION	REMOTE CONTROL	Open: Normal work Short: Stop Charging		
	LEAKAGE CURRENT FROM BATTERY (Typ.)	1mA		
	FAST CHARGE	2 / 3 / 8 stage selectable		
	CHARGER OK	Relay contact (RY15)		
	OUTPUT OK	Relay contact (RY13)		
	TEMPERATURE SENSE	By NTC		
ENVIRONMENT	WORKING TEMP.	-20 ~ +60℃ (Refer to "Derating Curve")		
	WORKING HUMIDITY	20 ~ 90% RH non-condensing		
	STORAGE TEMP., HUMIDITY	-40 ~ +85℃, 10 ~ 95% RH non-condensing		
	TEMP. COEFFICIENT	±0.05%/℃ (0 ~ 50℃)		
	VIBRATION	10 ~ 500Hz, 2G 10min./1cycle, 60min. each along X, Y, Z axes		
SAFETY & EMC (Note 3)	SAFETY STANDARDS	UL1012, TUV BS EN/EN60335-1, BS EN/EN60335-2-29 (except for 48V), BS EN/EN62368-1(48V only), EAC TP TC 004 approved		
	WITHSTAND VOLTAGE	I/P-O/P:3KVAC I/P-FG:2KVAC O/P-FG:0.5KVAC		
	ISOLATION RESISTANCE	I/P-O/P, I/P-FG, O/P-FG:100M Ohms / 500VDC / 25℃/ 70% RH		
	EMC EMISSION	Compliance to BS EN/EN55032 class B (CISPR32), BS EN/EN61000-3-2,-3, EAC TP TC 020		
	EMC IMMUNITY	Compliance to BS EN/EN61000-4-2,3,4,5,6,8,11, BS EN/EN55035; light industry level, EAC TP TC 020		
OTHERS	MTBF	650.6K hrs min. Telcordia SR-332 (Bellcore) ; 135.7K hrs min. MIL-HDBK-217F (25℃)		
	DIMENSION	230*158*67mm(L*W*H)		
	PACKING	2.2Kg; 6pcs/14.2Kg/1.76CUFT		

NOTE

1. Modification for charger specification may be required for different battery specification. Please contact battery vendor and MEAN WELL for details.
2. All parameters NOT specially mentioned are measured at 230VAC input, rated load and 25℃ of ambient temperature.
3. The power supply is considered a component which will be installed into a final equipment. The final equipment must be re-confirmed that it still meets EMC directives.
4. This is Mean Well's suggested range. Please consult your battery manufacturer for their suggestions about maximum charging current limitation.
5. Please choose the "3 stage" selection when the charger is used to charge the batteries and power the loads in the same time.
6. The ambient temperature derating of 3.5℃/1000m with fanless models and of 5℃/1000m with fan models for operating altitude higher than 2000m(6500ft).

※ Product Liability Disclaimer : For detailed information, please refer to https://www.meanwell.com/serviceDisclaimer.aspx

Distribuída no Brasil pela LRI | vendas@lri.com.br | 51 2129-3000

■ Mechanical Specification

Case No.805C Unit:mm

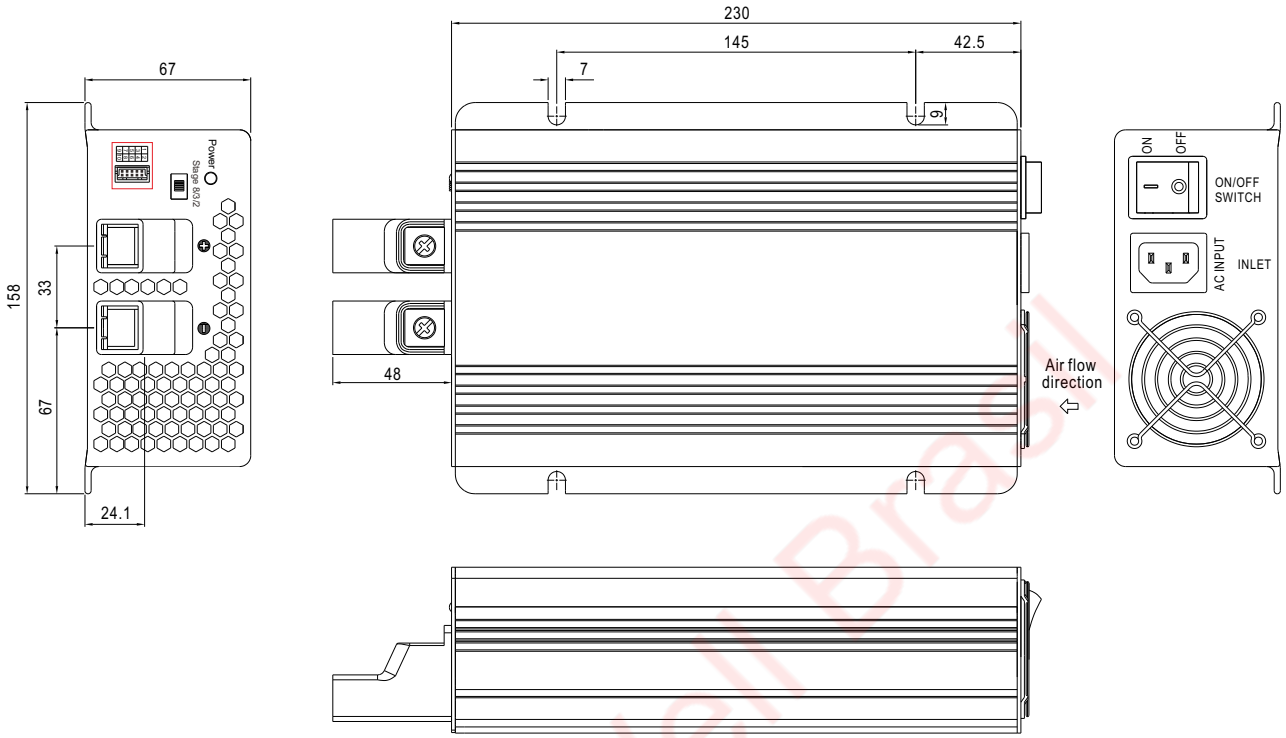

※ LED Loading Indicator Status Table

Color \ Status	Steady	Flashing
Red	Abnormal status	
Orange		Charging
Green	Full	Charging

※ Control Pin No. Assignment(CN100) : HRS DF11-10DP-2DS or equivalent

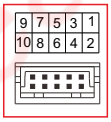

CN100

Mating Housing	HRS DF11-10DS or equivalent
Terminal	HRS DF11-**SC or equivalent

Pin No.	Function	Description
1,2	RY13	RY13 : Battery Bank OK relay. Relay contact rating(max.) : 30V/1A resistive. ; "Short" when the battery is full, "Open" when the battery is still charging.
5,6	RY15	RY15 : Charger OK relay. Relay contact rating(max.) : 30V/1A resistive. ; "Short" when the unit is working properly, "Open" when the unit is failure or the protection function is activating.
7	GND	NTC / GND : Temperature sense Temperature sensor comes along with the charger can be connected to the unit to allow temperature compensation of the charging voltage
8	NTC(5KΩ) RTH	
9,10	RC- / RC+	Remote ON/OFF function. Turn the output on and off by electrical or dry contact between pin 10 (RC+) and pin 9(RC-). "Open" : Normal work ; "Short" : Stop charging

Distribuída no Brasil pela LRI | vendas@lri.com.br | 51 2129-3000

■ Block Diagram

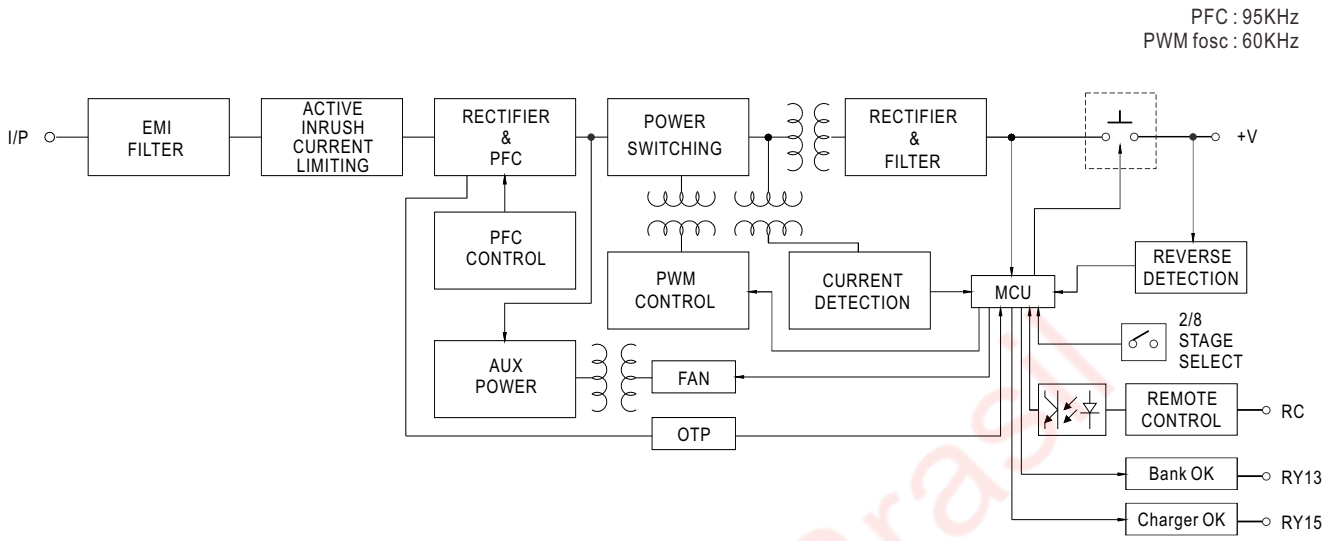

■ Derating Curve

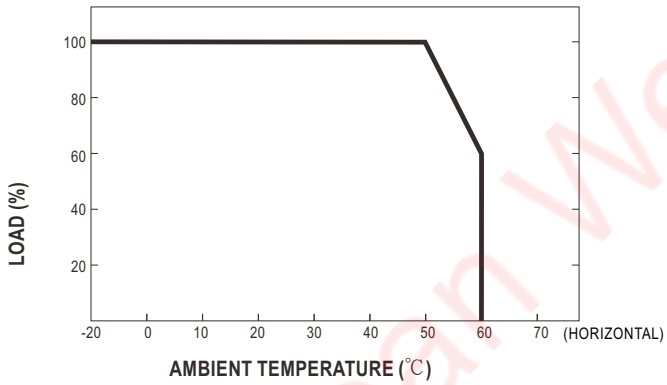

■ Static Characteristics

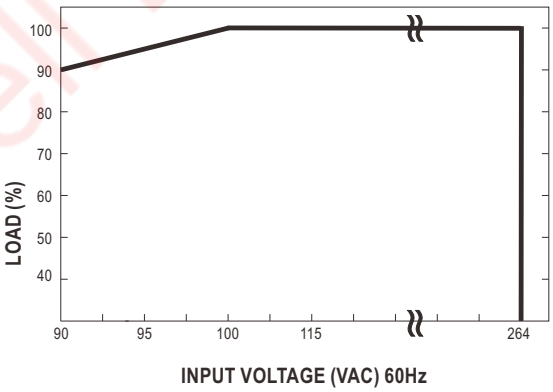

■ Charging Curve

2 Stage

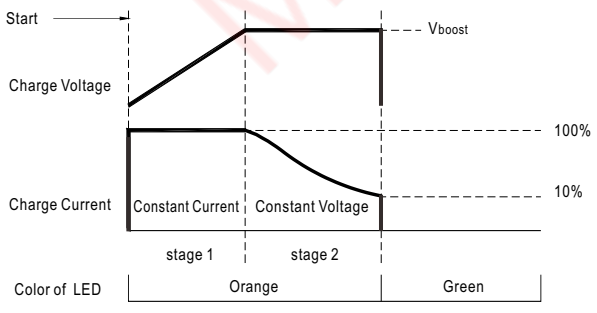

State	PB-600-12	PB-600-24	PB-600-48
Constant Current	40A	21A	10.5A
Vboost	14.4V	28.8V	57.6V

◎ Suitable for lead-acid batteries (flooded, Gel and AGM) and Li-ion batteries (lithium iron and lithium manganese).

3 Stage

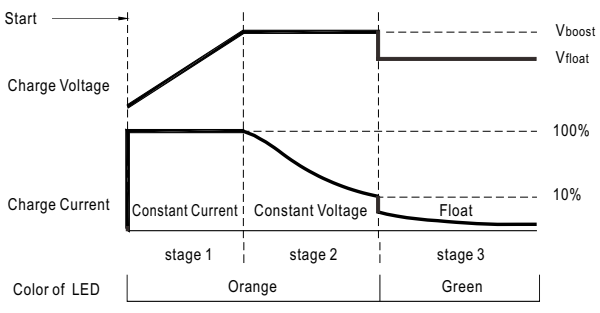

State	PB-600-12	PB-600-24	PB-600-48
Constant Current	40A	21A	10.5A
Vboost	14.4V	28.8V	57.6V
Vfloat	13.8V	27.6V	55.2V

◎ Suitable for lead-acid batteries (flooded, Gel and AGM) and Li-ion batteries (lithium iron and lithium manganese).

Mean Well Brasil

LRI Distribuída no Brasil pela LRI | vendas@lri.com.br | 51 2129-3000

8 Stage

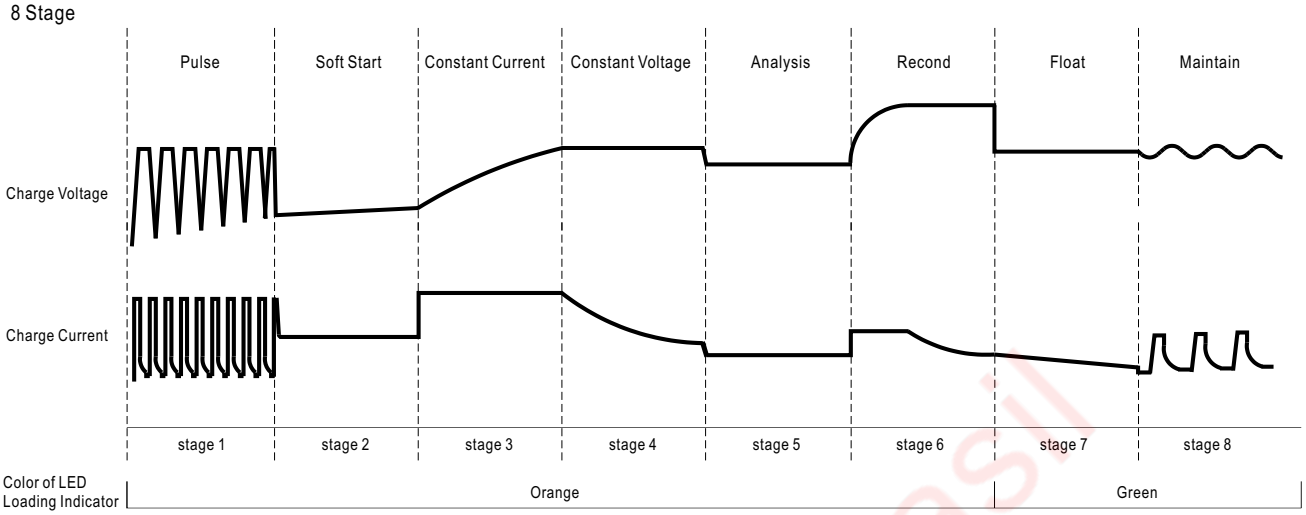

◎ Suitable for lead-acid batteries (flooded, Gel and AGM).
◎ "stage 1"(Pulse) and "stage 2"(Soft Start) provide battery rescue function.

2,3, or 8 stage charging select

(1)The charger features user selectable 2,3, or 8 stage charging. The charging profile is selected by moving the slide switch on the back panel.

Switch	Charging mode
Right	2 stage charging
Middle	3 stage charging
Left	8 stage charging

(2)Please choose the "3 stage" selection when the charger is used to charge the batteries and power the loads in the same time.

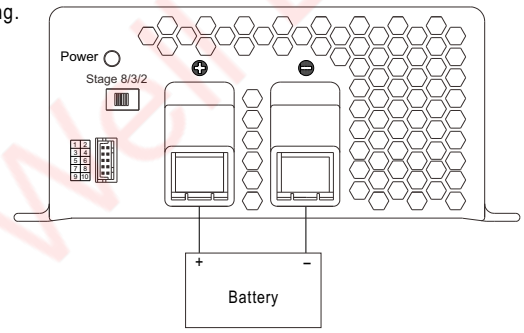

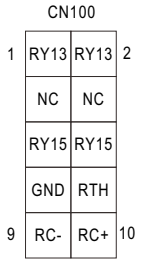

■ Function Manual

1.Remote Control

The charger can be turned ON/OFF by using the "Remote Control" function.

Between RC+(pin10) and RC-(pin9)	Charging
SW Open	ON
SW Short	OFF

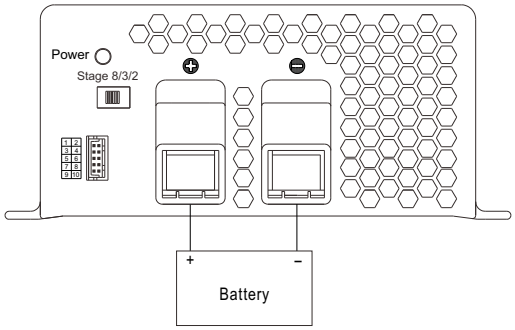

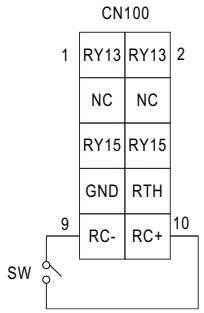

Mean Well Brasil

LRI Distribuída no Brasil pela LRI | vendas@lri.com.br | 51 2129-3000

2.Charger OK Relay(RY15)

Charger	Between pin5 and pin6(RY15)
Work normally	ON (Short)
Failure or protection function activated	OFF (Open)

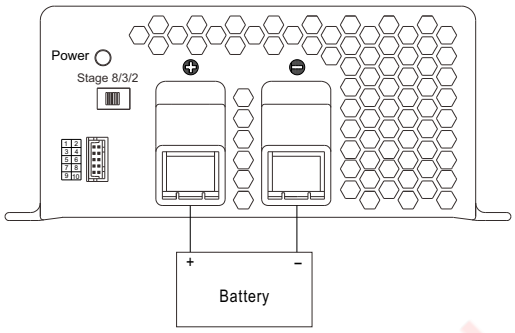

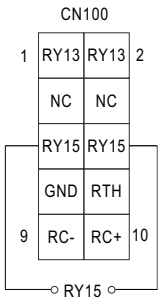

3.Output OK Relay (RY13)

1.Bank OK (RY13)

Bank	Between pin1 and pin2(RY13)	Color of LED
Battery Full	ON (Short)	Green
Charging	OFF (Open)	Orange

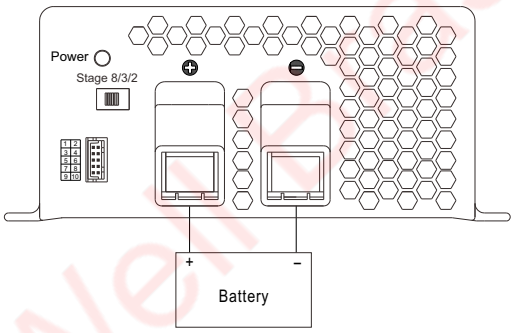

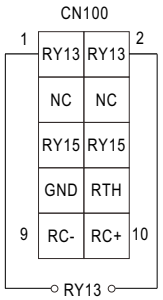

4.Temperature compensation

Temperature sensor comes along with the charger can be connected to the unit to allow temperature compensation of the charging voltage.
If the sensor is not used, the charger still works normally.

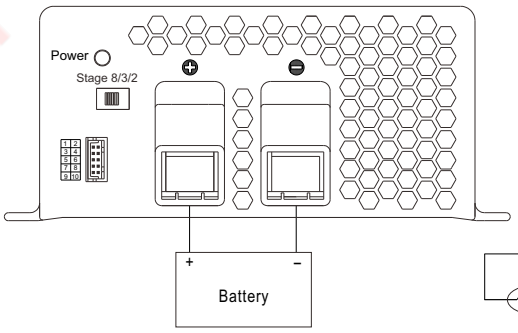

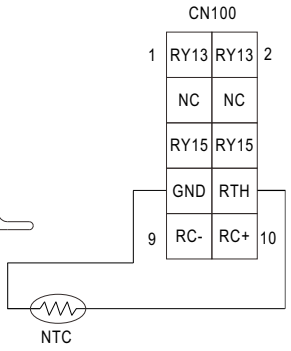

The temperature sensor can either be attached to the battery or placed in its surrounding environment.

Mean Well Brasil

LRI Distribuída no Brasil pela LRI | vendas@lri.com.br | 51 2129-3000