50W Single Output Switching Power Supply

NES-50 series



■ Features :

- Universal AC input/Full range
- Protections: Short circuit / Overload / Over voltage
- Cooling by free air convection
- 100% full load burn-in test
- 2 years warranty

SPECIFICATION

MODEL		NES-50-5	NES-50-12	NES-50-15	NES-50-24	NES-50-48
OUTPUT	DC VOLTAGE	5V	12V	15V	24V	48V
	RATED CURRENT	10A	4.2A	3.4A	2.2A	1.1A
	CURRENT RANGE	0 ~ 10A	0 ~ 4.2A	0 ~ 3.4A	0 ~ 2.2A	0 ~ 1.1A
	RATED POWER	50W	50.4W	51W	52.8W	52.8W
	RIPPLE & NOISE (max.) Note.2	80mVp-p	120mVp-p	150mVp-p	200mVp-p	240mVp-p
	VOLTAGE ADJ. RANGE	4.75 ~ 5.5V	10.8 ~ 13.2V	13.5 ~ 16.5V	21.6 ~ 26.4V	43.2 ~ 52.8V
	VOLTAGE TOLERANCE Note.3	±2.0%	±1.0%	±1.0%	±1.0%	±1.0%
	LINE REGULATION Note.4	±0.5%	±0.5%	±0.5%	±0.5%	±0.5%
	LOAD REGULATION Note.5	±0.5%	±0.5%	±0.5%	±0.5%	±0.5%
	SETUP, RISE TIME	500ms, 30ms/230VAC 1200ms, 30ms/115VAC at full load				
	HOLD UP TIME (Typ.)	50ms/230VAC 10ms/115VAC at full load				
INPUT	VOLTAGE RANGE	85 ~ 264VAC 120 ~ 370VDC				
	FREQUENCY RANGE	47 ~ 63Hz				
	EFFICIENCY(Typ.)	79%	82%	83%	86%	87%
	AC CURRENT (Typ.)	1.1A/115VAC 0.65A/230VAC				
	INRUSH CURRENT (Typ.)	COLD START 45A				
	LEAKAGE CURRENT	<2mA / 240VAC				
PROTECTION	OVERLOAD	110 ~ 150% rated output power				
		Protection type : Hiccup mode, recovers automatically after fault condition is removed				
	OVER VOLTAGE	5.75 ~ 6.75V	13.8 ~ 16.2V	17.25 ~ 20.25	27.6 ~ 32.4V	55.2 ~ 64.8V
		Protection type : Shut down o/p voltage, re-power on to recover				
ENVIRONMENT	WORKING TEMP.	-20 ~ +60℃ (Refer to "Derating Curve")				
	WORKING HUMIDITY	20 ~ 90% RH non-condensing				
	STORAGE TEMP., HUMIDITY	-40 ~ +85℃, 10 ~ 95% RH				
	TEMP. COEFFICIENT	±0.03%/℃ (0 ~ 45℃)				
	VIBRATION	10 ~ 500Hz, 2G 10min./1cycle, period for 60min. each along X, Y, Z axes				
SAFETY & EMC (Note 7)	SAFETY STANDARDS Note.6	UL60950-1, CB(IEC60950-1),CCC GB4943.1:2011 approved				
	WITHSTAND VOLTAGE	I/P-O/P:3KVAC I/P-FG:2KVAC O/P-FG:0.5KVAC				
	ISOLATION RESISTANCE	I/P-O/P, I/P-FG, O/P-FG:100M Ohms / 500VDC / 25℃/ 70% RH				
	EMC EMISSION	Compliance to EN55022 (CISPR22) Class B, EN61000-3-2,-3				
	EMC IMMUNITY	Compliance to EN61000-4-2,3,4,5,6,8,11, EN55024, EN61000-6-1, light industry level, criteria A				
OTHERS	MTBF	374.2K hrs min. MIL-HDBK-217F (25℃)				
	DIMENSION	129*98*38mm (L*W*H)				
	PACKING	0.41Kg; 30pcs/13.3Kg/0.72CUFT				
NOTE	1. All parameters NOT specially mentioned are measured at 230VAC input, rated load and 25℃ of ambient temperature. 2. Ripple & noise are measured at 20MHz of bandwidth by using a 12" twisted pair-wire terminated with a 0.1uf & 47uf parallel capacitor. 3. Tolerance : includes set up tolerance, line regulation and load regulation. 4. Line regulation is measured from low line to high line at rated load. 5. Load regulation is measured from 0% to 100% rated load. 6. For the request of GB4943.1,the power supply is only suitable for use in the altitude 2000m below and the non tropical climate condition. 7. The power supply is considered a component which will be installed into a final equipment. The final equipment must be re-confirmed that it still meets EMC directives. For guidance on how to perform these EMC tests, please refer to “EMI testing of component power supplies.” (as available on http://www.meanwell.com)					

Distribuída no Brasil pela LRI | vendas@lri.com.br | 51 2129-3000

■ Mechanical Specification

Case No. 903 Unit:mm

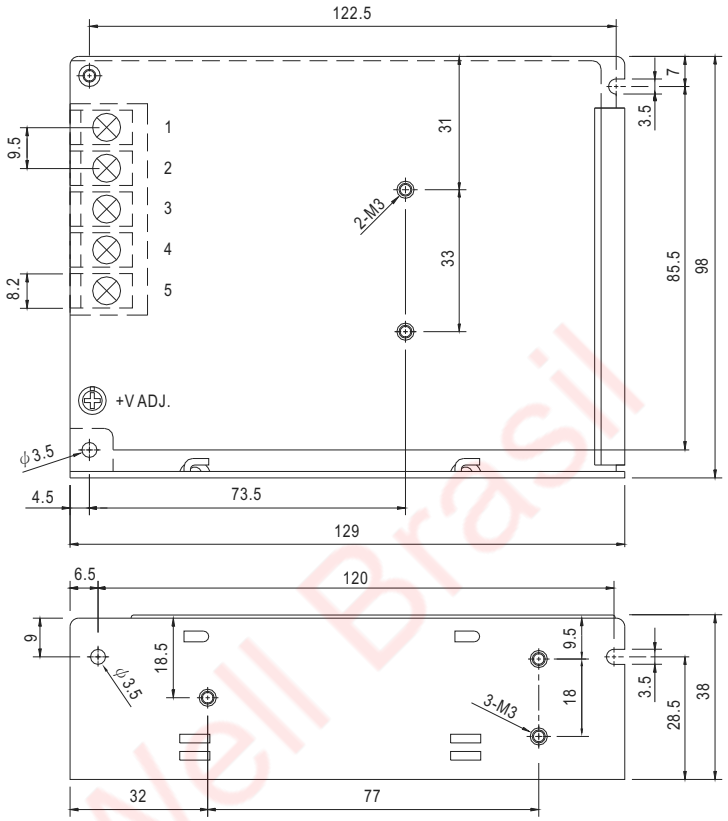

Terminal Pin No. Assignment

Pin No.	Assignment	Pin No.	Assignment
1	AC/L	4	DC OUTPUT -V
2	AC/N	5	DC OUTPUT +V
3	FG ⏚		

■ Block Diagram

fosc : 60KHz

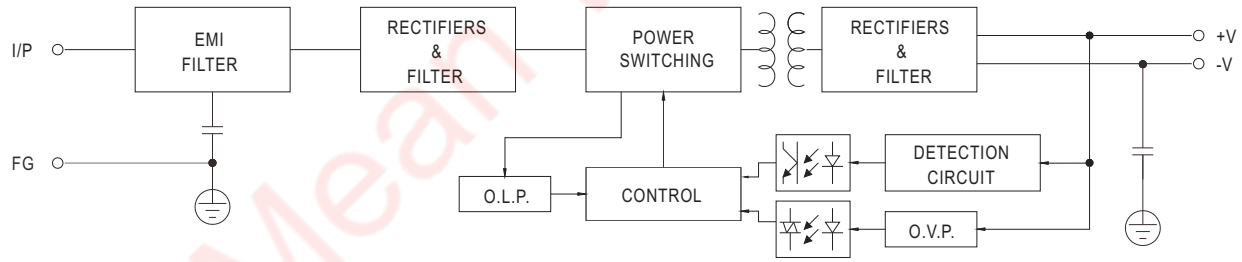

■ Derating Curve

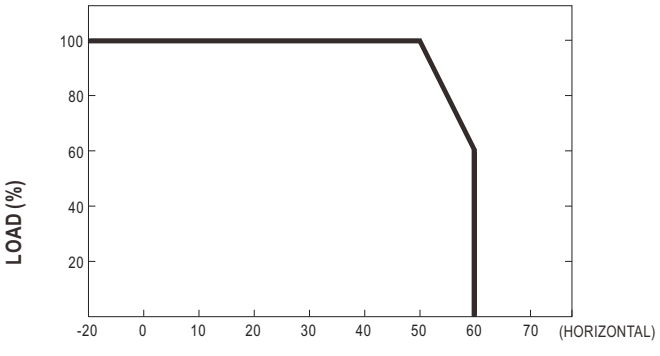

AMBIENT TEMPERATURE (℃)

■ Output Derating VS Input Voltage

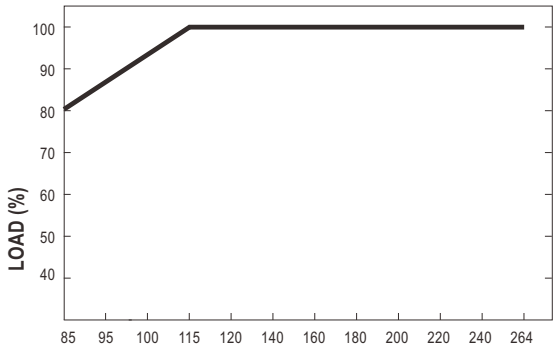

INPUT VOLTAGE (VAC) 60Hz

Mean Well Brasil

LRI Distribuída no Brasil pela LRI | vendas@lri.com.br | 51 2129-3000