350W Single Output Switching Power Supply

NES-350 series



■ Features :

- AC input range selectable by switch
- Protections: Short circuit / Overload / Over voltage/ Over temperature
- Forced air cooling by built-in DC fan
- Withstand 300vac surge input for 5 second
- Built-in cooling Fan ON-OFF control
- Built-in constant current limiting circuit
- 100% full load burn-in test
- LED indicator for power on
- Fixed switching frequency at 90KHz
- Low cost,high reliability
- 2 years warranty

User's Manual

SPECIFICATION

MODEL		NES-350-3.3	NES-350-5	NES-350-7.5	NES-350-12	NES-350-15	NES-350-24	NES-350-27	NES-350-36	NES-350-48
OUTPUT	DC VOLTAGE	3.3V	5V	7.5V	12V	15V	24V	27V	36V	48V
	RATED CURRENT	60A	60A	46A	29A	23.2A	14.6A	13A	9.7A	7.3A
	CURRENT RANGE	0 ~ 60A	0 ~ 60A	0 ~ 46A	0 ~ 29A	0 ~ 23.2A	0 ~ 14.6A	0 ~ 13A	0 ~ 9.7A	0 ~ 7.3A
	RATED POWER	198W	300W	345W	348W	348W	350.4W	351W	349.2W	350.4W
	RIPPLE & NOISE (max.) Note.2	150mVp-p	150mVp-p	150mVp-p	150mVp-p	150mVp-p	150mVp-p	200mVp-p	240mVp-p	240mVp-p
	VOLTAGE ADJ. RANGE	2.97 ~ 3.7V	4.5 ~ 5.6V	6 ~ 9V	10 ~ 13.5V	13.5 ~ 18V	20 ~ 26.4V	26 ~ 32V	32~40V	41 ~ 56V
	VOLTAGE TOLERANCE Note.3	+3%,-4.5%	±3.0%	±2.0%	±1.5%	±1.0%	±1.0%	±1.0%	±1.0%	±1.0%
	LINE REGULATION	±0.5%	±0.5%	±0.5%	±0.5%	±0.5%	±0.5%	±0.5%	±0.5%	±0.5%
	LOAD REGULATION	±2.5%	±2.0%	±2.0%	±1.0%	±0.5%	±0.5%	±0.5%	±0.5%	±0.5%
	SETUP, RISE TIME	1000ms, 50ms/230VAC 1000ms,50ms/115VAC at full load								
	HOLD UP TIME (Typ.)	20ms/230VAC 16ms/115VAC at full load								
INPUT	VOLTAGE RANGE Note.4	90 ~ 132VAC / 180 ~ 264VAC by switch 254 ~ 370VDC								
	FREQUENCY RANGE	47 ~ 63Hz								
	EFFICIENCY (Typ.)	74%	78%	80%	83%	84%	87%	88%	87.5%	87.5%
	AC CURRENT (Typ.)	7A/115VAC 4A/230VAC								
	INRUSH CURRENT (Typ.)	40A/115VAC 60A/230VAC								
	LEAKAGE CURRENT	<3.5mA / 240VAC								
PROTECTION	OVER LOAD	105 ~ 135% rated output power								
		Protection type : Constant current limiting, recovers automatically after fault condition is removed								
	OVER VOLTAGE	3.8 ~ 4.6V	5.75 ~ 7.5V	9.4 ~ 11.25V	13.8 ~ 16.2V	18 ~ 21V	27.6 ~ 32.4V	33.7 ~ 39.2V	41.4~46.8V	57.6 ~ 67.2V
		Protection type :Shut down O/P voltage, re-power on to recover								
	OVER TEMPERATURE	90℃±5℃(3.3~7.5V); 85℃±5℃(12~15V); 80℃±5℃(24V);75℃±5℃(27~48V) (TSW1) Detect on case								
		Protection type : Shut down O/P voltage, recovers automatically after temperature goes down								
FUNCTION	FAN ON/OFF CONTROL(Typ.)	RTH2≧50℃ FAN ON, ≦45℃ FAN OFF (3.3 ~ 7.5V)								
		RTH2≧55℃ FAN ON, ≦50℃ FAN OFF (12 ~ 48V)								
ENVIRONMENT	WORKING TEMP.	-20 ~ +60℃ (Refer to output load derating curve)								
	WORKING HUMIDITY	20 ~ 90% RH non-condensing								
	STORAGE TEMP., HUMIDITY	-20 ~ +85℃, 10 ~ 95% RH								
	TEMP. COEFFICIENT	±0.03%/℃ (0 ~ 50℃)								
	VIBRATION	10 ~ 500Hz, 3G 10min./1cycle, 60min. each along X, Y, Z axes								
SAFETY	SAFETY STANDARDS	UL60950-1 approved								
	WITHSTAND VOLTAGE	I/P-O/P:3KVAC I/P-FG:2KVAC O/P-FG:0.5KVAC								
	ISOLATION RESISTANCE	I/P-O/P, I/P-FG, O/P-FG:100M Ohms/500VDC / 25℃/ 70% RH								
OTHERS	MTBF	234.3K hrs min. MIL-HDBK-217F (25℃)								
	DIMENSION	215*115*50mm (L*W*H)								
	PACKING	1.07Kg; 12pcs/13.5Kg/0.9CUFT								
NOTE	1. All parameters NOT specially mentioned are measured at 230VAC input, rated load and 25℃ of ambient temperature. 2. Ripple & noise are measured at 20MHz of bandwidth by using a 12" twisted pair-wire terminated with a 0.1uf & 47uf parallel capacitor. 3. Tolerance : includes set up tolerance, line regulation and load regulation.									

LRI Distribuída no Brasil pela LRI | vendas@lri.com.br | 51 2129-3000

■ Mechanical Specification

Case No. 912C Unit:mm

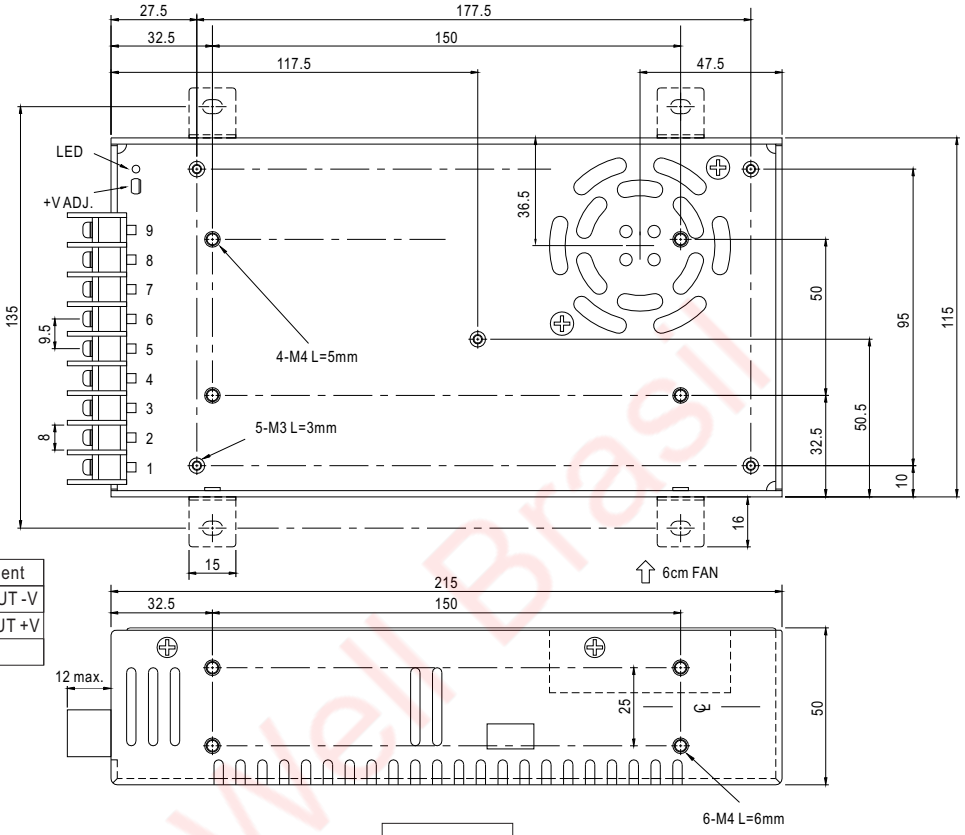

Terminal Pin No. assignment :

Pin No.	Assignment	Pin No.	Assignment
1	AC/L	4~6	DC OUTPUT -V
2	AC/N	7~9	DC OUTPUT +V
3	FG ⏚		

■ Block Diagram

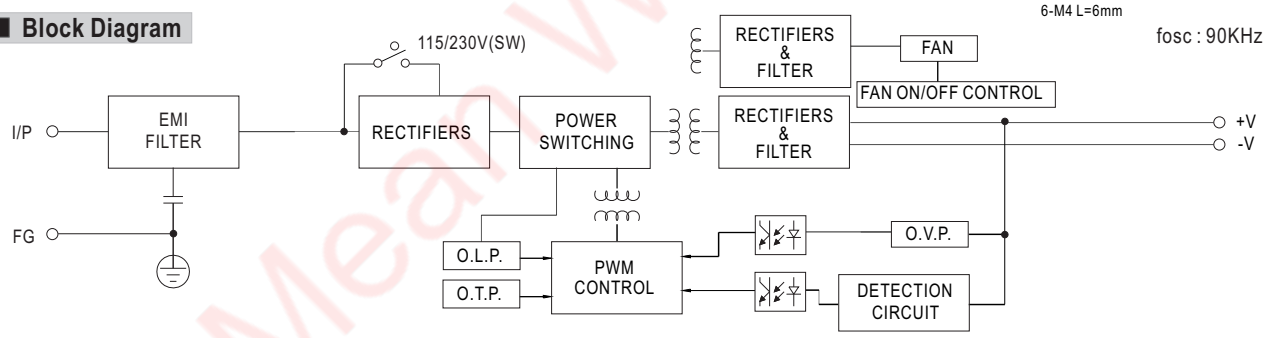

■ Derating Curve

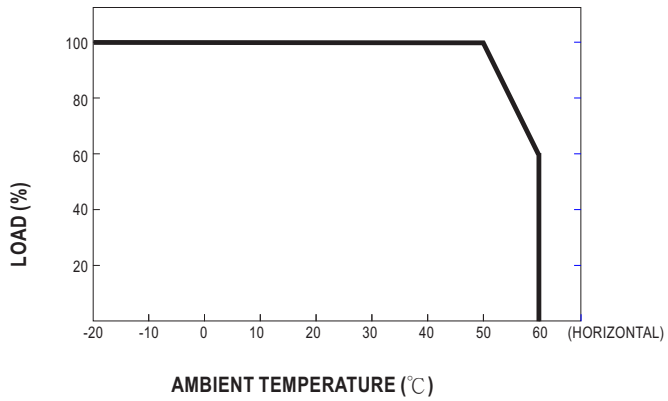

■ Static Characteristics

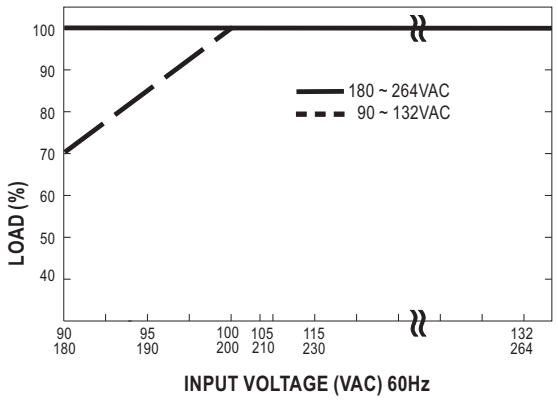

Distribuída no Brasil pela LRI | vendas@lri.com.br | 51 2129-3000