100W Dual Output Switching Power Supply

NED-100 series



■ Features :

- AC input range selectable by switch
- Protections: Short circuit / Overload / Over voltage
- Cooling by free air convection
- LED indicator for power on
- 100% full load burn-in test
- 2 years warranty

SPECIFICATION

MODEL		NED-100A		NED-100B		NED-100C		NED-100D	
OUTPUT	OUTPUT NUMBER	CH1	CH2	CH1	CH2	CH1	CH2	CH1	CH2
	DC VOLTAGE	5V	12V	5V	24V	12V	5V	24V	5V
	RATED CURRENT	10A	4.2A	8A	2.5A	7A	3A	3.5A	3A
	CURRENT RANGE Note.6	2 ~ 10A	0.7 ~ 7.0A	1 ~ 10A	0.3 ~ 3.5A	0 ~ 8A	0 ~ 3A	0 ~ 4A	0 ~ 3A
	RATED POWER	100.4W		100W		99W		99W	
	RIPPLE & NOISE (max.) Note.2	80mVp-p	120mVp-p	80mVp-p	200mVp-p	120mVp-p	80mVp-p	120mVp-p	80mVp-p
	VOLTAGE ADJ. RANGE	CH1: 4.75 ~ 5.5V		CH1: 4.75 ~ 5.5V		CH1: 11.4 ~ 13.2V		CH1: 22.8 ~ 26.4V	
	VOLTAGE TOLERANCE Note.3	±2.0%	±10%	±2.0%	±8.0%	±2.0%	±3.0%	±2.0%	±3.0%
	LINE REGULATION Note.4	±0.5%	±0.5%	±0.5%	±0.5%	±0.5%	±0.5%	±0.5%	±0.5%
	LOAD REGULATION Note.5	±1.0%	±5.0%	±1.0%	±4.0%	±1.0%	±2.0%	±1.0%	±2.0%
	SETUP, RISE TIME	2000ms, 30ms/230VAC 1200ms, 30ms/115VAC at full load							
	HOLD TIME (Typ.)	25ms/230VAC 20ms/115VAC at full load							
INPUT	VOLTAGE RANGE	88 ~ 132VAC / 176 ~ 264VAC selected by switch 248 ~ 373VDC							
	FREQUENCY RANGE	47 ~ 63Hz							
	EFFICIENCY (Typ.)	80%		82%		80%		82%	
	AC CURRENT (Typ.)	2A/115VAC 1.2A/230VAC							
	INRUSH CURRENT (Typ.)	COLD START 45A							
	LEAKAGE CURRENT	<2mA / 240VAC							
PROTECTION	OVER LOAD	110 ~ 150% rated output power							
		Protection type : Hiccup mode, recovers automatically after fault condition is removed							
	OVER VOLTAGE	CH1: 5.75 ~ 6.75V		CH2: 5.75 ~ 6.75V		CH1: 13.8 ~ 15.8V		CH2: 27.6 ~ 32.4V	
		Protection type : Hiccup mode, recovers automatically after fault condition is removed							
ENVIRONMENT	WORKING TEMP.	-20 ~ +60℃ (Refer to output load derating curve)							
	WORKING HUMIDITY	20 ~ 90% RH non-condensing							
	STORAGE TEMP., HUMIDITY	-40 ~ +85℃, 10 ~ 95% RH							
	TEMP. COEFFICIENT	±0.03%/℃ (0 ~ 50℃)on Ch1 output							
	VIBRATION	10 ~ 500Hz, 2G 10min./1cycle, period for 60min. each along X, Y, Z axes							
SAFETY & EMC (Note 7)	SAFETY STANDARDS	UL60950-1, CB(IEC60950-1) Approved							
	WITHSTAND VOLTAGE	I/P-O/P:3KVAC I/P-FG:2KVAC O/P-FG:0.5KVAC							
	ISOLATION RESISTANCE	I/P-O/P, I/P-FG, O/P-FG:100M Ohms/500VDC							
	EMI CONDUCTION & RADIATION	Compliance to EN55022 (CISPR22) Class B							
	HARMONIC CURRENT	Compliance to EN61000-3-2,-3							
	EMS IMMUNITY	Compliance to EN61000-4-2, 3, 4, 5, 6, 8,11, ENV50204, EN55024,EN61000-6-1,light industry level, criteria A							
OTHERS	MTBF	320.7K hrs min. MIL-HDBK-217F (25℃)							
	DIMENSION	199*98*38mm (L*W*H)							
	PACKING	0.55Kg; 30pcs/17.5Kg/0.97CUFT							

NOTE

1. All parameters NOT specially mentioned are measured at 230VAC input, rated load and 25℃ of ambient temperature.
2. Ripple & noise are measured at 20MHz of bandwidth by using a 12" twisted pair-wire terminated with a 0.1uf & 47uf parallel capacitor.
3. Tolerance : includes set up tolerance, line regulation and load regulation.
4. Line regulation is measured from low line to high line at rated load.
5. Load regulation is measured from 20% to 100% rated load, and other output at 60% rated load.
6. Each output can work within current range. But total output power can't exceed rated output power.
7. The power supply is considered a component which will be installed into a final equipment. The final equipment must be re-confirmed that it still meets EMC directives. For guidance on how to perform these EMC tests, please refer to "EMI testing of component power supplies." (as available on http://www.meanwell.com)

LRI Distribuída no Brasil pela LRI | vendas@lri.com.br | 51 2129-3000

■ Mechanical Specification

Case No. 902 Unit:mm

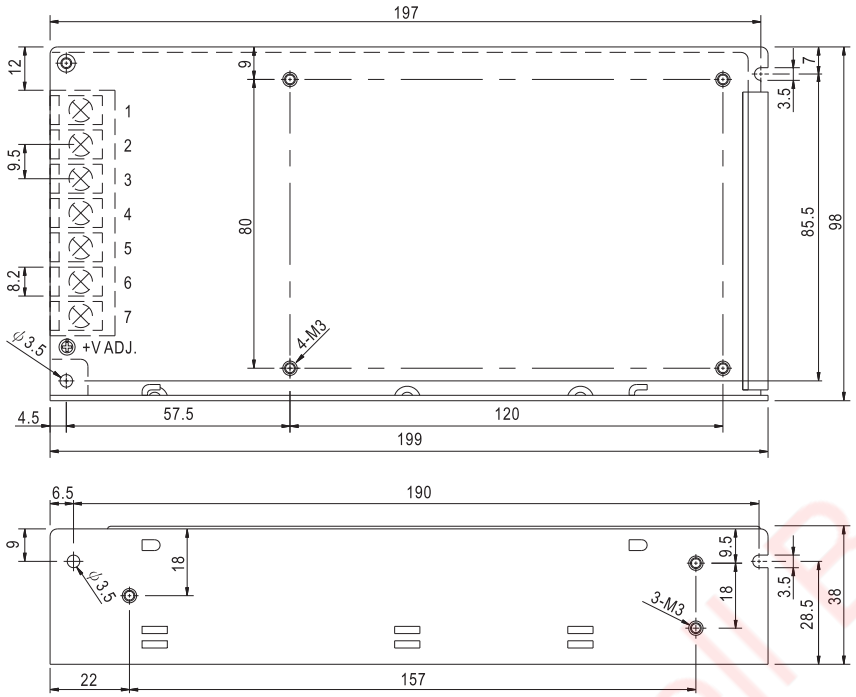

Terminal Pin No. Assignment

Pin No.	Assignment	Pin No.	Assignment
1	AC/L	5	DC OUTPUT +V2
2	AC/N	4,6	DC OUTPUT COM
3	FG ⏚	7	DC OUTPUT +V1

■ Block Diagram

fosc : 55KHz

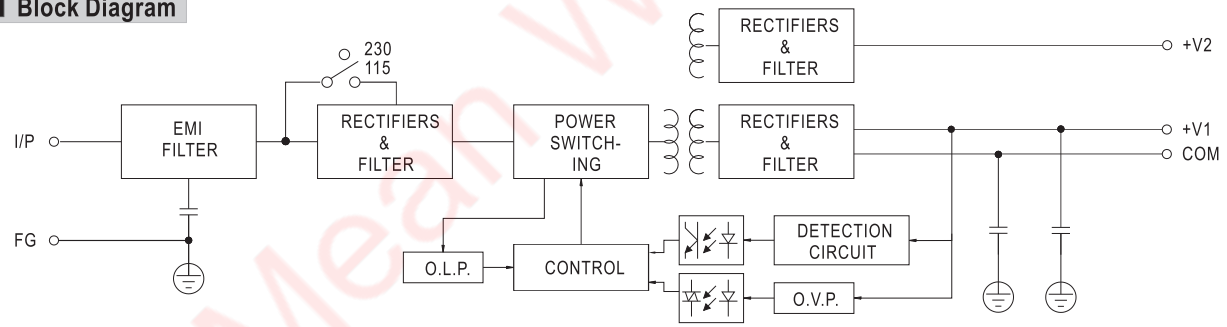

■ Derating Curve

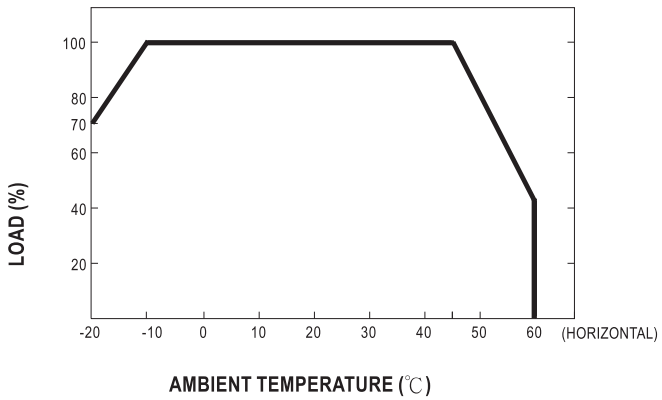

■ Output Derating VS Input Voltage

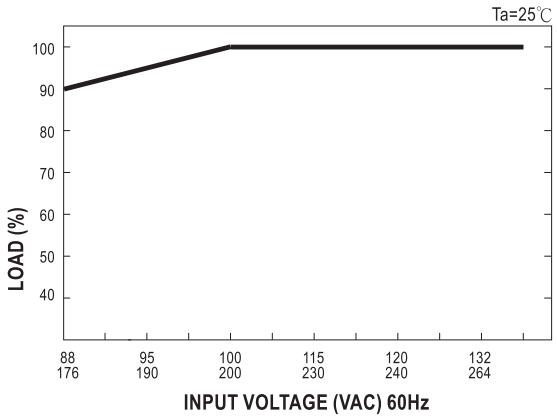

Mean Well Brasil

LRI Distribuída no Brasil pela LRI | vendas@lri.com.br | 51 2129-3000