2A Non-Isolated DC-DC Switching Regulator

N78-2 series

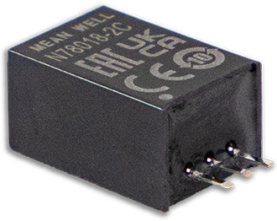

(C Type)

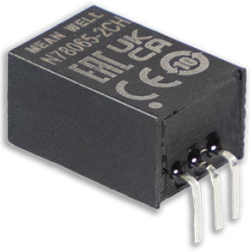

(CH Type)

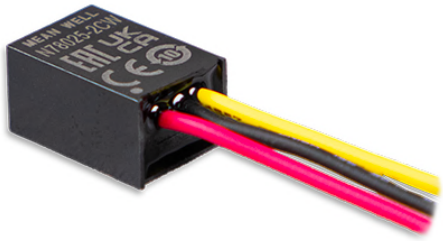

(CW Type)

Features

- Compact size
- Pin-out compatible with LM78xx / LM79xx linear regulators
- High efficiency up to 96%, no heatsink required
- Wide input range up to 32V
- Support negative output
- Operating temperature range -40 ~ +85℃
- Comply to BS EN/EN55032 radiated Class B without additional components
- Protections: Short circuit / Overload / Over temperature
- Low ripple and noises
- 3 years warranty

Applications

- Voltage step down
- Power supplies
- Industrial PC
- Digital set-top boxes
- Data communications
- Microcontroller related applications
- Point of load regulator in distributed power system

GTIN CODE

MW Search: https://www.meanwell.com/serviceGTIN.aspx

Description

N78-2 series converters is high efficiency switching regulators can suit to replace LM78xx/LM79xx linear regulators and its pin-out can be compatible with LM78xx / LM79xx IC. One of the key features is the model can be chosen positive or negative output voltage according to the application. It also features high efficiency up to 96% meant low power loss, wide working temperature range of -40℃ up to +85℃ with no additional heat sink, compliance with EN55032 radiated Class B without external components, and so on.

Model Encoding

N 78 03 – 2 C

- C: With vertical mount
- CH: With Horizontal mount
- CW: Casing type with Wire

Output current (2A)

Output voltage (1.8V/±2.5V/±3.3V/±5V/±6.5V/±9V/±12V/±15V)

Series name

Non-isolated

Distribuída no Brasil pela LRI | vendas@lri.com.br | 51 2129-3000

MODEL SELECTION TABLE

ORDER NO.	INPUT			OUTPUT		EFFICIENCY @Vin min. (NOTE 3.)	CAPACITOR LOAD (MAX.)
	INPUT VOLTAGE (RANGE) (NOTE 2.)	INPUT CURRENT		OUTPUT VOLTAGE	OUTPUT CURRENT		
		NO LOAD	FULL LOAD				
N78018-2□	12, 24V (4.5 ~ 28V)	1mA	964mA	1.8V	0 ~ 2000mA	83%	2000μF
N78025-2□	12, 24V (4.5 ~ 32V)	1mA	1248mA	2.5V	0 ~ 2000mA	88%	2000μF
	12, 24V (8 ~ 32V)	1mA	363mA	-2.5V	0 ~ 1000mA	86%	1000μF
N7803-2□	12, 24V (6 ~ 32V)	1mA	1279mA	3.3V	0 ~ 2000mA	89%	1800μF
	12, 24V (8 ~ 31V)	1mA	485mA	-3.3V	0 ~ -1000mA	85%	1000μF
N7805-2□	12, 24V (8 ~ 32V)	1mA	1344mA	5V	0 ~ 2000mA	92%	1000μF
	12, 24V (8 ~ 30V)	1mA	727mA	-5V	0 ~ -1000mA	86%	680μF
N78065-2□	12, 24V (10 ~ 32V)	1mA	1413mA	6.5V	0 ~ 2000mA	92%	1000μF
	12, 24V (8 ~ 29V)	1mA	956mA	-6.5V	0 ~ -1000mA	85%	680μF
N7809-2□	24V (13 ~ 32V)	1mA	1458mA	9V	0 ~ 2000mA	95%	680μF
	12, 24V (8 ~ 26V)	1mA	1047mA	-9V	0 ~ -800mA	86%	330μF
N7812-2□	24V (16 ~ 32V)	1mA	1563mA	12V	0 ~ 2000mA	96%	470μF
	12V (8 ~ 23V)	1mA	1035mA	-12V	0 ~ -600mA	87%	220μF
N7815-2□	24V (18 ~ 30V)	1mA	1739mA	15V	0 ~ 2000mA	96%	470μF
	12V (8 ~ 20V)	1mA	1293mA	-15V	0 ~ -600mA	87%	220μF

LRI Distribuída no Brasil pela LRI | vendas@lri.com.br | 51 2129-3000

SPECIFICATION				
INPUT	VOLTAGE RANGE	32V max.(Please refer to page 2)		
	SURGE VOLTAGE (100ms max.)	36V max.		
	FILTER	Capacitor		
	PROTECTION	Fuse recommended. 3000mA Slow-Blow Type for all models		
	INTERNAL POWER DISSIPATION	1250mW		
OUTPUT	VOLTAGE ACCURACY	±3.0% max.		
	RATED POWER	3.6W ~ 30W		
	RIPPLE & NOISE Note.4	100mVp-p max.		
	LINE REGULATION Note.5	1.8 ~ 3.3V: ±0.5% others: ±0.4%		
	LOAD REGULATION Note.6	1.8 ~ 3.3V: ±1.5% others: ±1.0%		
	SWITCHING FREQUENCY (Typ.)	400KHz		
PROTECTION	SHORT CIRCUIT	Continuous, automatic recovery		
	OVERLOAD	150% ~ 300%		
		Protection type : recovers automatically after fault condition is removed		
	OVER TEMPERATURE	Protection type : shut down o/p voltage, automatic recovery		
ENVIRONMENT	COOLING	Free-air convection		
	WORKING TEMP.	-40 ~ +85℃ (Refer to "Derating Curve")		
	CASE TEMPERATURE	+110℃ max.		
	WORKING HUMIDITY	5% ~ 95% RH non-condensing		
	STORAGE TEMP., HUMIDITY	-55 ~ +125℃, 10 ~ 95% RH non-condensing		
	TEMP. COEFFICIENT	0.03% / ℃ (0 ~ 60℃)		
	SOLDERING TEMPERATURE	1.5mm from case of 3 ~ 5sec./265℃ max.		
	VIBRATION	10 ~ 500Hz, 2G 10min./1cycle, period for 60min. each along X, Y, Z axes		
SAFETY & EMC (Note.7)	SAFETY STANDARDS	EAC TP TC 020/2011 approved		
	ISOLATION VOLTAGE	Non-Isolation		
	EMC EMISSION	**Parameter**	**Standard**	**Test Level / Note**
		Conducted	BS EN/EN55032(CISPR32)	N/A
		Radiated	BS EN/EN55032(CISPR32)	Class B
	EMC IMMUNITY	**Parameter**	**Standard**	**Test Level / Note**
		ESD	BS EN/EN61000-4-2	Level 3, ±8KV air discharge
		Radiated Susceptibility	BS EN/EN61000-4-3	Level 2, 3V/m
		EFT/Bursts	BS EN/EN61000-4-4	Level 1, 0.5KV
		Surge	BS EN/EN61000-4-5	Level 1, 0.5KV Line-Line
		Conducted	BS EN/EN61000-4-6	Level 2, 3Vrms
OTHERS	MTBF	1600Khrs MIL-HDBK-217F(25℃)		
	DIMENSION (L*W*H)	11.5mm*9.0mm*17.5mm		
	CASE MATERIAL	Non-Conductive plastic (UL 94V-0 rated)		
	PACKING	C type : 4g ; 42pcs/per tube, 3360pcs/80 tube/per carton CH type : 4g ; 150pcs/Box, 1800pcs/12 Box/per carton CW type : 5.5g ; 70pcs/Box, 840pcs/12 Box/per carton		
NOTE	1.All parameters are specified at normal input, rated load, 25℃ 70% RH ambient. 2.For input voltages higher than 30VDC, an input capacitor (22μF/50V) is required. 3.Efficiency and input current are measured at minimum input voltage and full load. 4.Ripple & noise are measured at 20MHz by using a 12" twisted pair terminated with a 0.1μf & 47μf capacitor. 5.Line regulation is measured from low line to high line at rated load. 6.Load regulation is measured from 10% to 100% rated load. 7.The final equipment must be re-confirm that it still meet EMC directives. For guidance on how to perform these EMC tests, please refer to “EMI testing of component power supplies.”(as available on http://www.meanwell.com) ※ Product Liability Disclaimer : For detailed information, please refer to https://www.meanwell.com/serviceDisclaimer.aspx			

LRI Distribuída no Brasil pela LRI | vendas@lri.com.br | 51 2129-3000

■ Mechanical Specification

- All dimensions in mm(inch)
- Tolerance: x.x or x.xx±0.5mm(x.x or x.xx±0.01")
- Pin size is: 0.75*0.25±0.1mm (±0.003")

※ C Type:

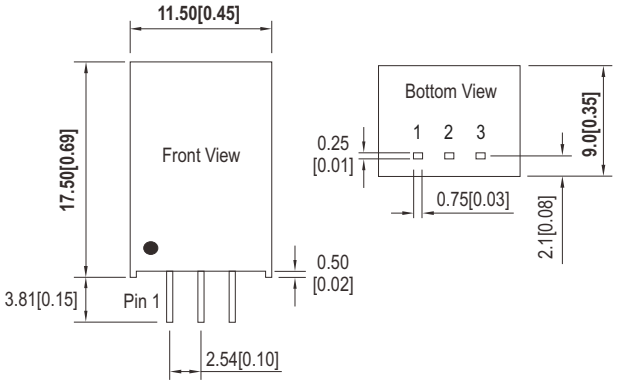

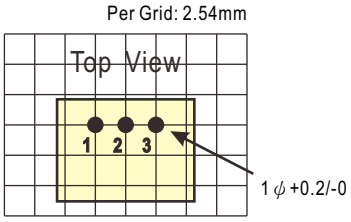

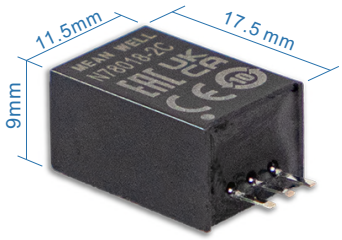

■ Plug Assignment

Pin-Out		
Pin No.	N78xx - 2C	
	+Output	-Output
1	+Vin	+Vin
2	GND	-Vout
3	+Vout	GND

※ CH Type:

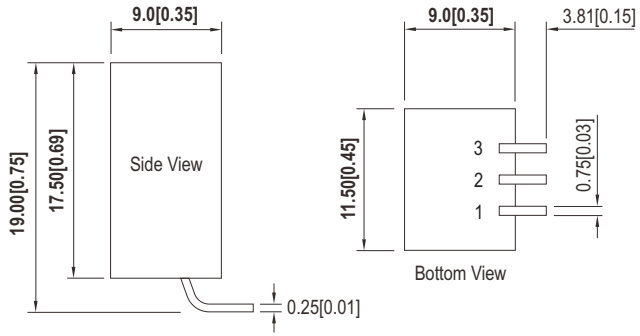

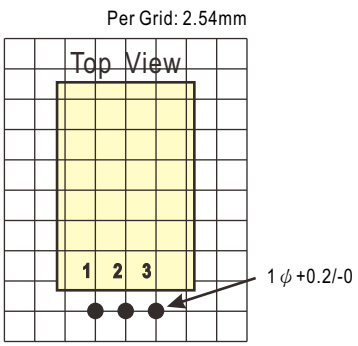

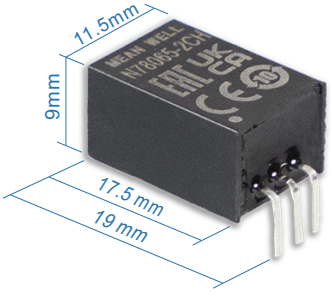

■ Plug Assignment

Pin-Out		
Pin No.	N78xx - 2CH	
	+Output	-Output
1	+Vin	+Vin
2	GND	-Vout
3	+Vout	GND

LRI Distribuída no Brasil pela LRI | vendas@lri.com.br | 51 2129-3000

■ Plug Assignment

※ **CW Type:**

(Casing type with Wire)

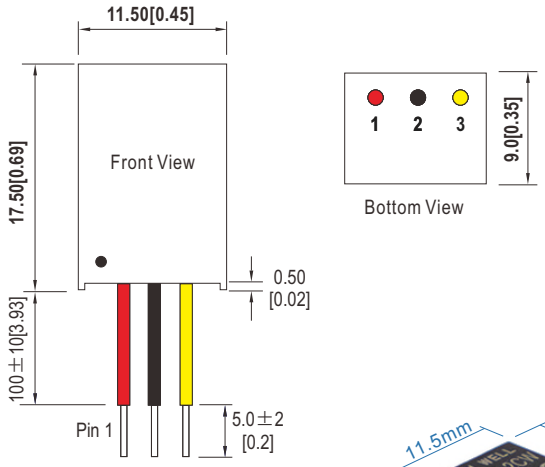

Pin-Out		
Pin No.	N78xx - 2CW	
	+Output	-Output
1 (Red)	+Vin	+Vin
2 (Black)	GND	-Vout
3 (Yellow)	+Vout	GND

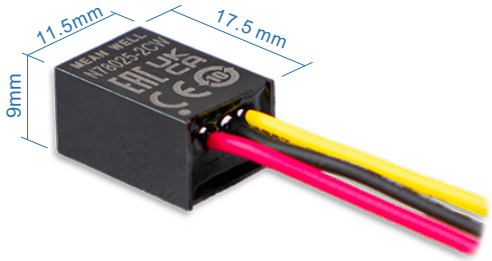

■ Derating Curve

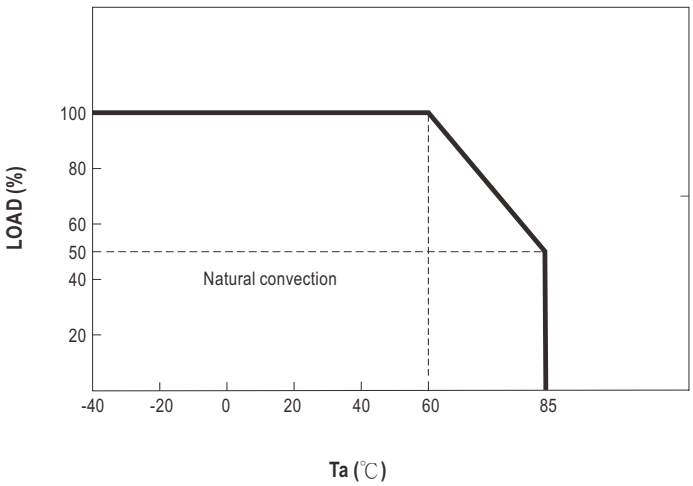

LRI Distribuída no Brasil pela LRI | vendas@lri.com.br | 51 2129-3000

■ External Input Fuse Recommended

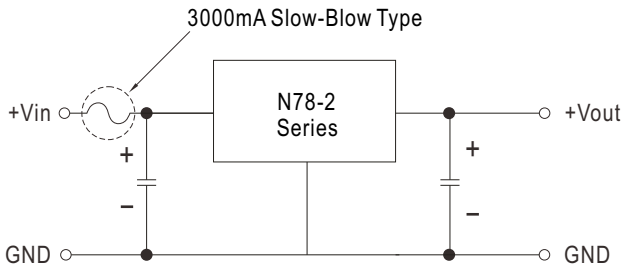

■ Positive or Negative Typical Applications

Positive output application circuit

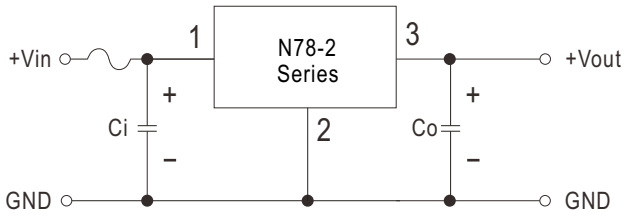

Negative output application circuit

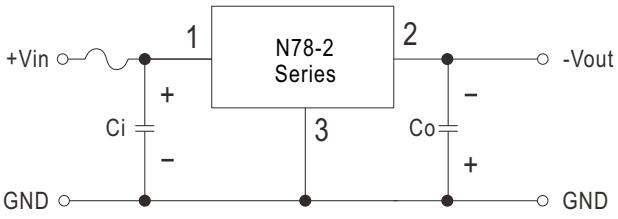

Positive and negative output paralleling application circuit

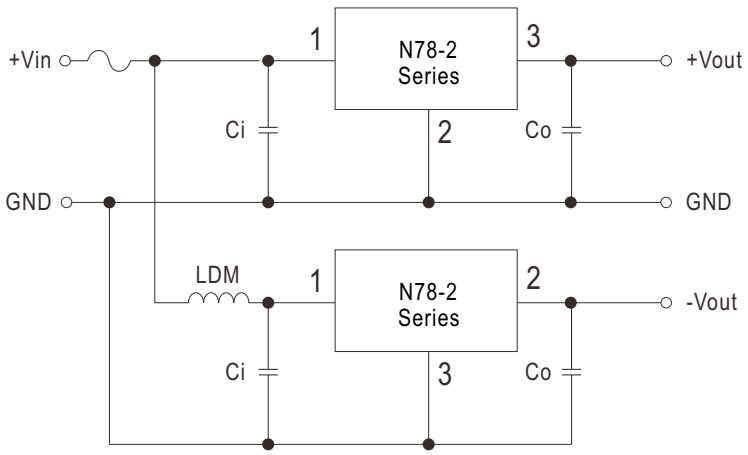

External capacitor table

Model No.	Ci (MLCC)	Co (MLCC)
N78018-2 ☐	10μF/50V	22uF/10V
N78025-2 ☐		
N7803-2 ☐		
N7805-2 ☐		
N78065-2 ☐		22uF/25V
N7809-2 ☐		
N7812-2 ☐		
N7815-2 ☐		

※ In using parallel application circuit, input voltage range should be taken notice of and a 10μH LDM component is recommended to reduce the interference.

Distribuída no Brasil pela LRI | vendas@lri.com.br | 51 2129-3000

■ Packing

Standard Packing	N78-2C			
	MPQ Per Tube (PCS)	One Tube G.W.	Max. Q'TY/ Carton(PCS)	One Carton G.W.
Unit : mm 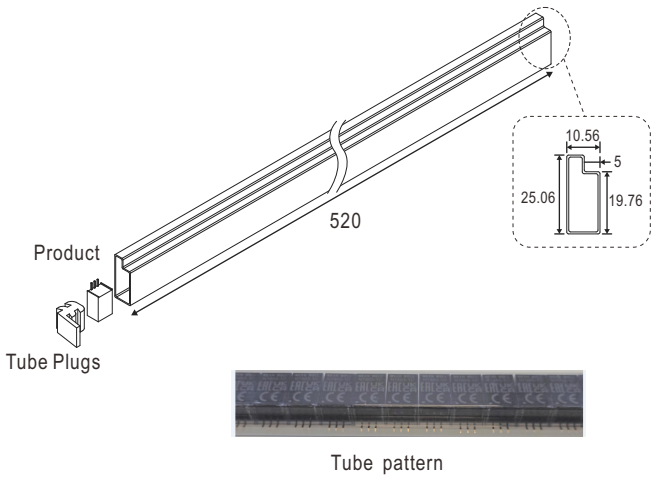 Tube pattern	42	200g	3360	17Kg

Unit : mm	N78-2CH			
	MPQ per(Box)	One Box G.W.	Max. Q'TY/ Carton(PCS)	One Carton G.W.
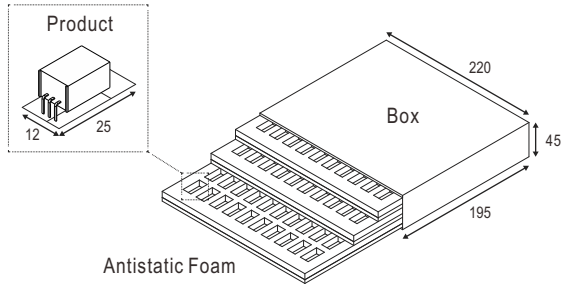 	150pcs	710g	1800	9.32Kg

LRI Distribuída no Brasil pela LRI | vendas@lri.com.br | 51 2129-3000

Standard Packing	N78-2CW			
	MPQ per(Box)	One Box G.W.	Max. Q'TY/ Carton(PCS)	One Carton G.W.
Unit : mm 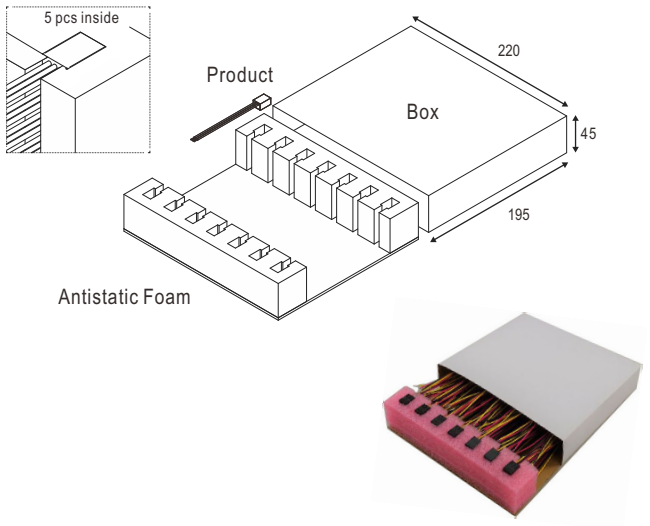	70	460g	840	6.8Kg

Standard Packing

Unit : mm

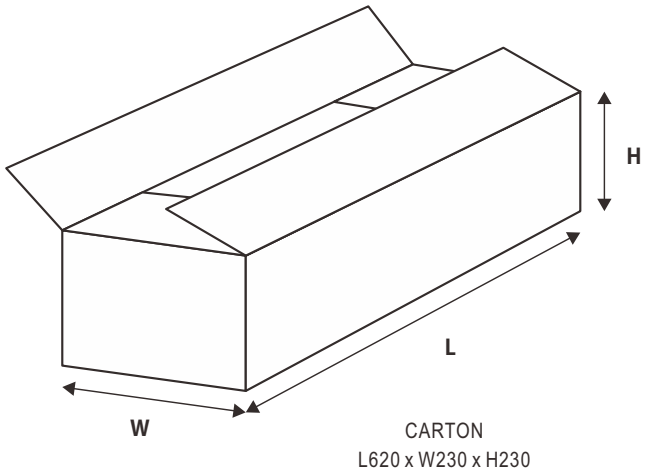

CARTON
L620 x W230 x H230

■ Installation Manual

Please refer to : http://www.meanwell.com/manual.html

Distribuída no Brasil pela LRI | vendas@lri.com.br | 51 2129-3000