75W DC-DC Half-Brick Regulated Single Output Converter MHB75 series



Features :

- Half-brick size (2.28"X2.4"X0.5") with industry standard pin out
- 2:1 wide input range
- Protections: Short circuit / Over current / Over voltage / Over temperature
- High efficiency up to 89%
- 1500VDC I/O isolation
- Built-in remote ON/OFF control
- Built-in remote sense function
- Trimming output ±10%
- Five-sided shield metal case
- Optional heat sinks for extended operating temperature
- Output 3.3V/15V available
- Approvals: UL / CUL / EAC / CE / UKCA
- 3 years warranty

GTIN CODE

MW Search: https://www.meanwell.com/serviceGTIN.aspx

SPECIFICATION

MODEL			MHB75-12S05	MHB75-12S12	MHB75-12S24	MHB75-24S05	MHB75-24S12	MHB75-24S24	MHB75-48S05	MHB75-48S12	MHB75-48S24
OUTPUT	DC VOLTAGE		5V	12V	24V	5V	12V	24V	5V	12V	24V
	CURRENT RANGE		0 ~ 15A	0 ~ 6.25A	0 ~ 3.13A	0 ~ 15A	0 ~ 6.25A	0 ~ 3.13A	0 ~ 15A	0 ~ 6.25A	0 ~ 3.13A
	RATED POWER		75W								
	RIPPLE & NOISE (max.) Note.2		75mVp-p	100mVp-p	240mVp-p	75mVp-p	100mVp-p	240mVp-p	75mVp-p	100mVp-p	240mVp-p
	VOLTAGE ACCURACY Note.3		±1.0%								
	LINE REGULATION		±0.2%								
	LOAD REGULATION		±0.2%								
	SWITCHING FREQUENCY (Typ.)		400KHz for 12/24Vin, 300KHz for 48Vin								
	EXTERNAL TRIM ADJ. RANGE (Typ.)		±10%								
	EXTERNAL CAPACITIVE LOAD (max.)		10000uF	10000uF	2000uF	10000uF	10000uF	2000uF	10000uF	10000uF	2000uF
INPUT	RATED DC INPUT		12VDC			24VDC			48VDC		
	VOLTAGE RANGE		9 ~ 18VDC			18 ~ 36VDC			36 ~ 75VDC		
	SURGE VOLTAGE (100ms max.)		25VDC			50VDC			100VDC		
	UNDER VOLTAGE LOCKOUT		Power up: 8.8VDC, Power down: 8VDC			Power up: 17VDC, Power down: 16VDC			Power up: 34VDC, Power down: 32.5VDC		
	EFFICIENCY (Typ.)		83%	87%	87%	84%	88%	88%	84%	89%	89%
	DC CURRENT	FULL LOAD	7570mA	7200mA	7200mA	3780mA	3650mA	3650mA	1900mA	1800mA	1800mA
		NO LOAD	50mA			50mA			50mA		
	FILTER		Pi-network								
PROTECTION	OUTPUT OVER CURRENT		110 ~ 150% rated output power								
			Protection type : Over current limiting, recovers automatically after fault condition is removed								
	OUTPUT OVER VOLTAGE (Typ.)		115 ~ 140% rated output voltage								
			Protection type : Output voltage clamp by TVS diode								
	OUTPUT SHORT CIRCUIT		Protection type : Can be continuous, recovers automatically after fault condition is removed								
	OVER TEMPERATURE		100℃±5℃of case temperature								
FUNCTION OPERATING	REMOTE CONTROL		Please refer to "Remote ON/OFF Control" for details								
	OUTPUT TRIMMING		±10%, Please refer to "External Output Trimming" for details								
ENVIRONMENT	WORKING TEMPERATURE (Typ.)		-40 ~ +100℃ ; Thermal shutdown at 100℃±5℃of case temperature (please refer to "Thermal Curve")								
	WORKING HUMIDITY		0% ~ 95% RH max.								
	STORAGE TEMP., HUMIDITY		-55 ~ +105℃, 0 ~ 95% RH								
	TEMP. COEFFICIENT		±0.03%/℃ (0~60℃)								
SAFETY & EMC (Note 4)	SAFETY STANDARDS		UL60950-1, EAC TP TC 020/2011(EAC TP TC 004 for 48Vin type only) approved								
	ISOLATION VOLTAGE		I/P-O/P:1500VDC, I/P-Case:1500VDC, O/P-Case:1500VDC								
	ISOLATION RESISTANCE		I/P-O/P:100M Ohms / 500VDC / 25℃/ 70% RH								
	EMC EMISSION		Compliance to BS EN/EN55032 (CISPR32) Class A with external components (please refer to "EMC Suggestion Circuit"), EAC TP TC 020								
	EMC IMMUNITY		Compliance to BS EN/EN61000-4-2,3,4,5,6,8; BS EN/EN55024, light industry level, criteria A, EAC TP TC 020								
OTHERS	CASE MATERIAL		Aluminum								
	MTBF		1000K hrs typ. MIL-HDBK-217F (25℃)								
	DIMENSION		57.9*61*12.7mm (2.28"*2.40"*0.5") (L*W*H)								
	PACKING		95g ; 12pcs/EPE, 60pcs/5 per carton								

NOTE

1. All parameters NOT specially mentioned are measured at 12,24,48VDC input, rated load and 25℃ of ambient temperature.
2. Ripple & noise are measured at 20MHz of bandwidth by using a 12" twisted pair-wire terminated with a 1uf ceramic & 10uf tantalum capacitor across output.
3. The power supply need to connect "+Vout" to "+R.S" and "-Vout" to "-R.S".
4. The power supply is considered a component which will be installed into a final equipment. The final equipment must be re-confirmed that it still meets EMC directives. For guidance on how to perform these EMC tests, please refer to "EMI testing of component power supplies."

※ Product Liability Disclaimer : For detailed information, please refer to https://www.meanwell.com/serviceDisclaimer.aspx

Distribuída no Brasil pela LRI | vendas@lri.com.br | 51 2129-3000

■ Mechanical Specification

Unit:inch[mm]

All Dimensions In Inches [mm]
Tolerance Inches: X.XX= ±0.02 , X.XXX= ±0.010
Millimeters: X.X= ±0.5 , X.XX=±0.25

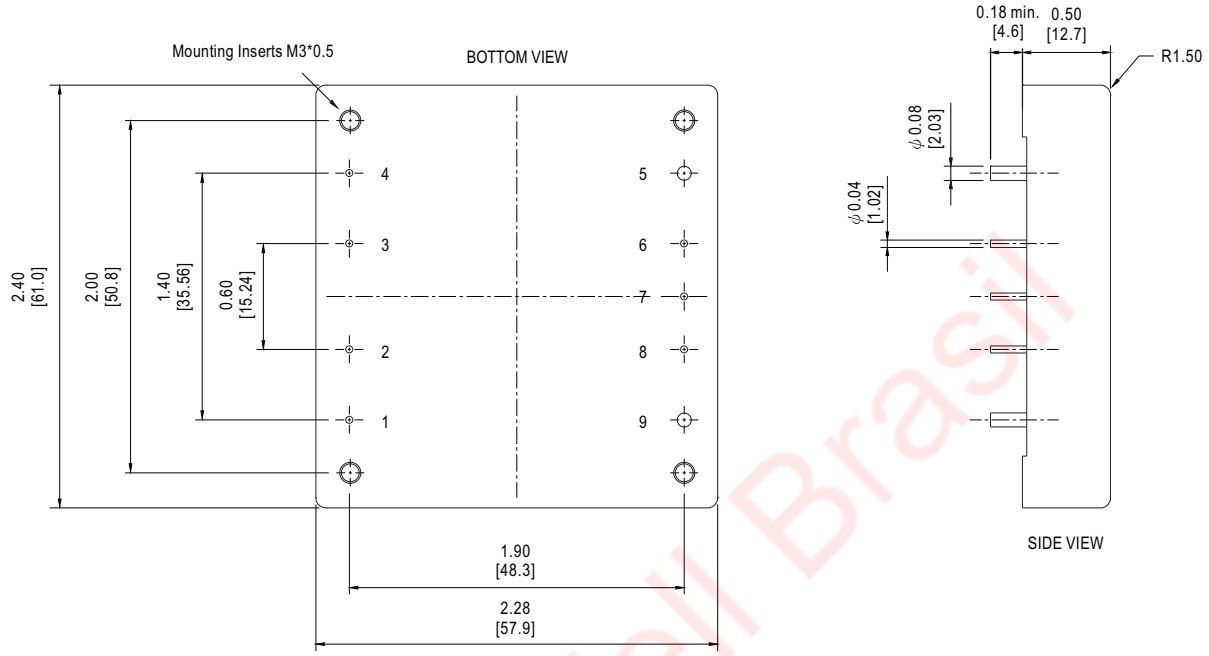

Pin No. Assignment

Pin No.	Assignment	Pin No.	Assignment	Pin No.	Assignment
1	+Vin	4	-Vin	7	Trim
2	R.C.	5	-Vout	8	+R.S.
3	Case	6	-R.S.	9	+Vout

■ Remote ON/OFF Control

The MHB75 series allow the user to switch the power ON and OFF electronically by their remote ON/OFF feature.
The MHB75 series are available with "Positive Logic" (standard) or "Negative Logic" (option).

Logic table

Logic State(pin2)	Positive logic	Negative logic
Logic Low-Switch Closed	Power OFF(<0.8Vdc)	Power ON(<0.8Vdc)
Logic High-Switch Open	Power ON(Open circuit)	Power OFF(Open circuit)

Note: 1.Logic compatibility : R.C.(pin2) ~ -Vin(pin4).
2.Suffix "N" to the model number with Negative logic remote ON/OFF.

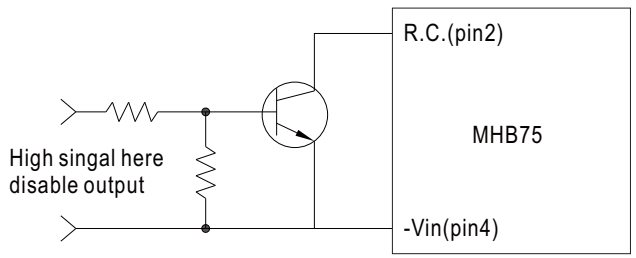

Example control circuit(positive logic)

Mean Well Brasil
LRI Distribuída no Brasil pela LRI | vendas@lri.com.br | 51 2129-3000

■ External Output Trimming

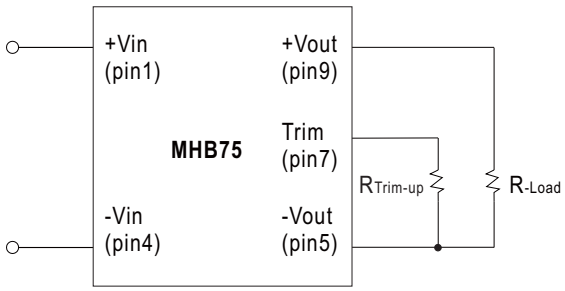

Figure 1 : Trim-up voltage setup

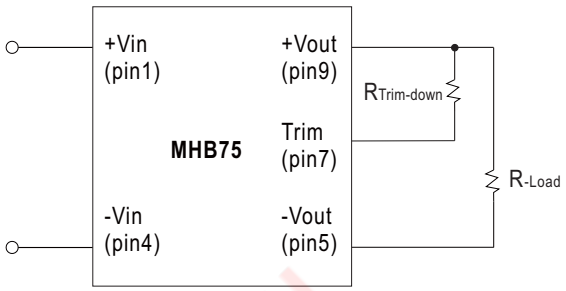

Figure 2 : Trim-down voltage setup

The value of $R_{Trim-up}$ defined as:

$$R_{Trim-up} = \frac{(R1-R2\times(Vo-Vo,nom))}{(Vo-Vo,nom)} (K\Omega)$$

Where: $R_{Trim-up}$ is the external resistor in Kohm.

Vo,nom is the nominal output voltage.

Vo is the desired output voltage.

R1 and R2 are inside the unit and list in Table 1

Output Voltage(V)	R1 (Kohm)	R2 (Kohm)
5V	5.8	8.25
12V	19.656	13.304
24V	42.215	16.923

Table 1

For example, to Trim-up the output voltage of 5.0V model (MHB75-48S05) by 8% to 5.4V, $R_{Trim-up}$ is calculated as follows:

Vo - Vo,nom = 5.4 -5.0 = 0.4V

R1 = 5.8 Kohm

R2 = 8.25 Kohm

$$R_{Trim-up} = \frac{5.8-8.25\times0.4}{0.4} = 6.25 (K\Omega)$$

The value of $R_{Trim-down}$ defined as:

$$R_{Trim-down} = \frac{(R1-R2\times(Vo,nom-Vo))}{(Vo,nom-Vo)} (K\Omega)$$

Where: $R_{Trim-down}$ is the external resistor in Kohm.

Vo,nom is the nominal output voltage.

Vo is the desired output voltage.

R1 and R2 are inside the unit and list in Table 2.

Output Voltage(V)	R1 (Kohm)	R2 (Kohm)
5V	5.8	10.57
12V	86.45	60.1
24V	430	130

Table 2

For example, to Trim-down the output Voltage of 5.0V model (MHB75-48S05) by 8% to 4.6V, $R_{Trim-down}$ is calculated as follows :

Vo,nom - Vo = 5.0 - 4.6 = 0.4 V

R1 = 5.8 Kohm

R2 = 10.57 Kohm

$$R_{Trim-down} = \frac{5.8-10.57\times0.4}{0.4} = 3.93 (K\Omega)$$

Mean Well Brasil

LRI Distribuída no Brasil pela LRI | vendas@lri.com.br | 51 2129-3000

■ Thermal Curve

The operating case temperature range of MHB-75 series is -40°C to +100°C. When operate the MHB-75 series, proper de-rating or cooling is needed.
The maximum case temperature under any operating condition should not be exceed 100°C. The following curve is the de-rating curve of MHB-75 series without heat sink.

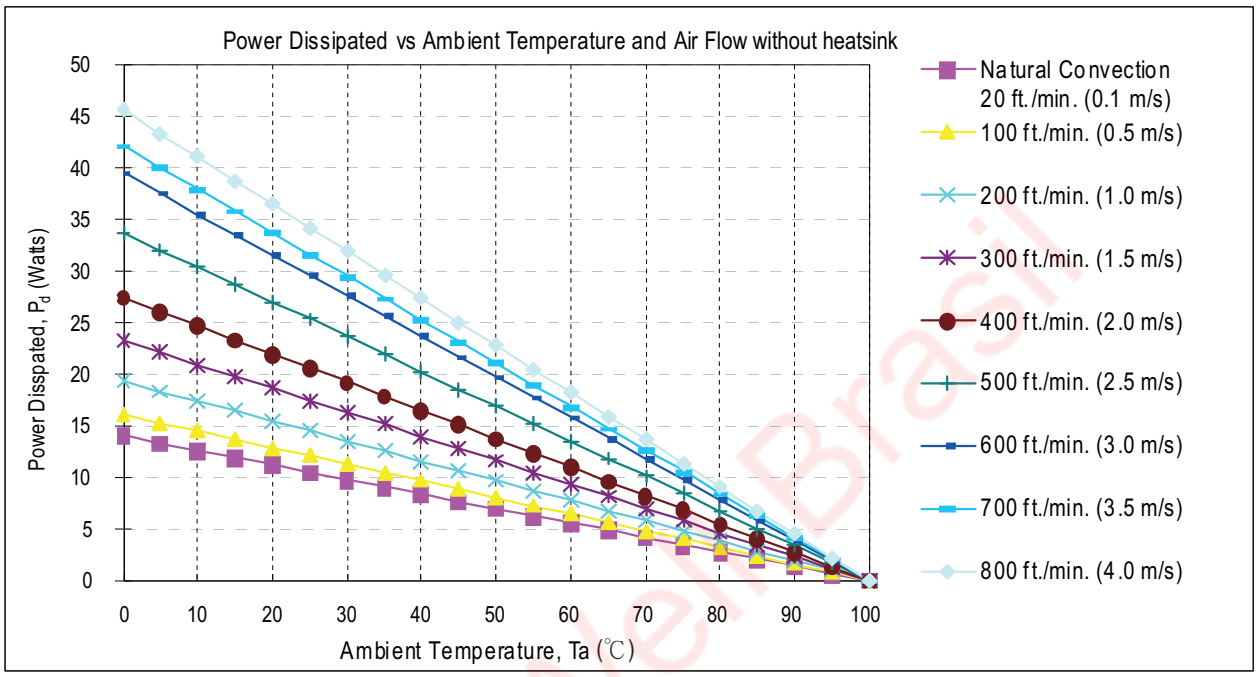

Air Flow Rate	Typical Rca	Air Flow Rate	Typical Rca
Natural convection 20ft./min. (0.1m/s)	7.12℃/W	500 ft./min. (2.5m/s)	2.96℃/W
100 ft./min. (0.5m/s)	6.21℃/W	600 ft./min. (3.0m/s)	2.53℃/W
200 ft./min. (1.0m/s)	5.17℃/W	700 ft./min. (3.5m/s)	2.37℃/W
300 ft./min. (1.5m/s)	4.29℃/W	800 ft./min. (4.0m/s)	2.19℃/W
400 ft./min. (2.0m/s)	3.64℃/W		

Rca : Thermal resistance from case to ambience

Example:
What is the minimum airflow necessary for a MHB75-48S12 operates at nominal line, an output current of 6.25A, and a maximum ambient temperature of 40℃?
Solution:
Given: Vin=48Vdc, Vo=12Vdc, Io=6.25A, η (unit efficiency)=89%
Determine Power dissipation (P_d):
P_d=Pi-Po=Po(1-η)/η
P_d=12x6.25x(1-0.89)/0.89=9.27 Watts
Determine airflow:
Given: P_d=9.27W and Ta=40℃
Check Thermal Curve above:
minimum airflow= 100 ft./min.
Verifying: The maximum temperature rise **△T = P_d x Rca=**9.27x6.21=57.57℃
The maximum case temperature **Tc=Ta+△T=**97.57℃ <100℃
Where: The Rca is thermal resistance from case to ambience.
The Ta is ambient temperature and the Tc is case temperature.

LRI Distribuída no Brasil pela LRI | vendas@lri.com.br | 51 2129-3000

■ Case Heat Sink (Optional)

Unit:mm

Model No.: M-C308 (Vertical Fins)



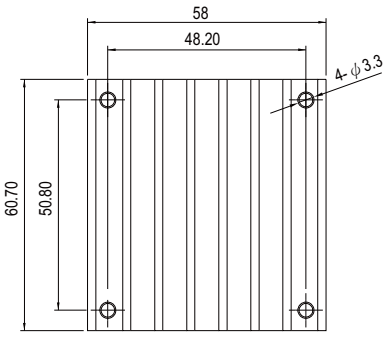

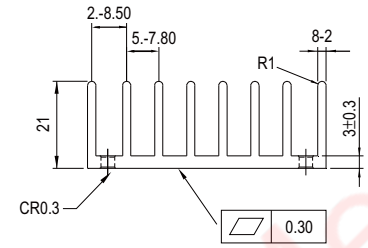

Rca:
3.90℃ / W (typ.), at natural convection
1.74℃ / W (typ.), at 100ft./min.(LFM)
1.33℃ / W (typ.), at 200ft./min.(LFM)
1.12℃ / W (typ.), at 300ft./min.(LFM)
0.97℃ / W (typ.), at 400ft./min.(LFM)

Model No.: M-C091(Horizontal Fins)



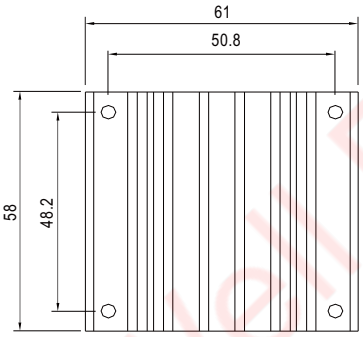

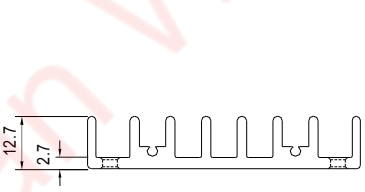

Rca:
4.70℃ / W (typ.), at natural convection
2.89℃ / W (typ.), at 100ft./min.(LFM)
2.30℃ / W (typ.), at 200ft./min.(LFM)
1.88℃ / W (typ.), at 300ft./min.(LFM)
1.59℃ / W (typ.), at 400ft./min.(LFM)

Model No.: M-C092 (Horizontal Fins)



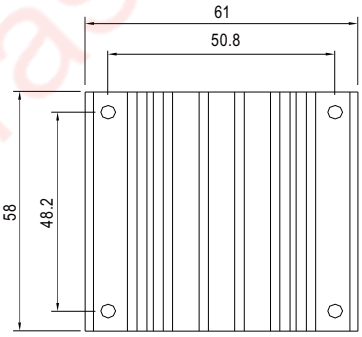

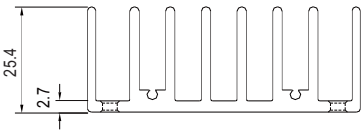

Rca:
3.00℃ / W (typ.), at natural convection
1.44℃ / W (typ.), at 100ft./min.(LFM)
1.17℃ / W (typ.), at 200ft./min.(LFM)
1.04℃ / W (typ.), at 300ft./min.(LFM)
0.95℃ / W (typ.), at 400ft./min.(LFM)

Mean Well Brasil

LRI Distribuída no Brasil pela LRI | vendas@lri.com.br | 51 2129-3000

■ Heatsink Assembly

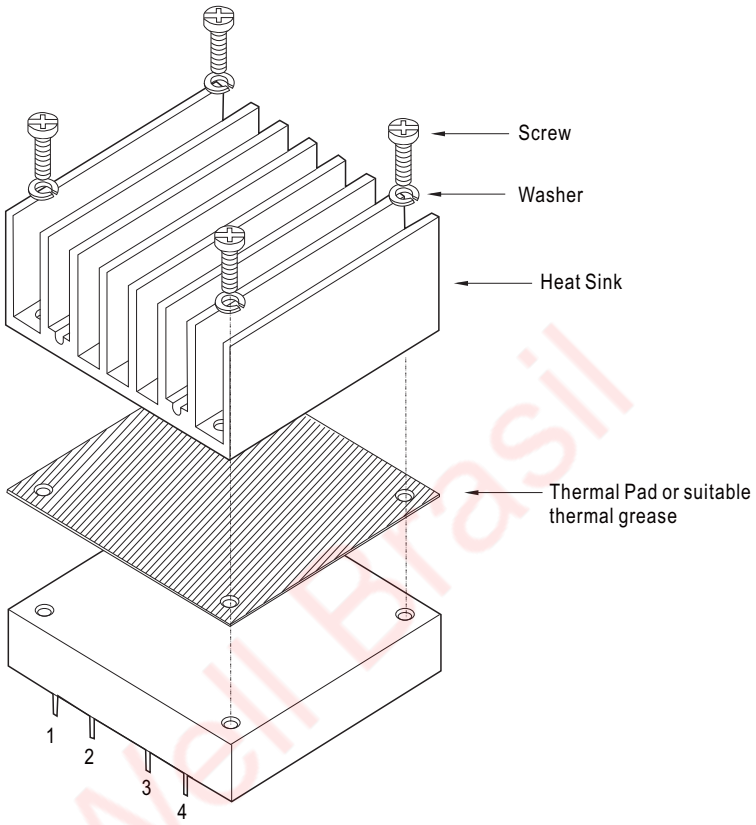

Heat Sink Order No.:
M-C308
M-C091
M-C092
Thermal Pad: 56.9x60x0.25mm
Screw: SMP+SW M3x8L

■ EMC Suggestion Circuit

※Required external components to meet BS EN/EN55032 class A conducted emission are as below:

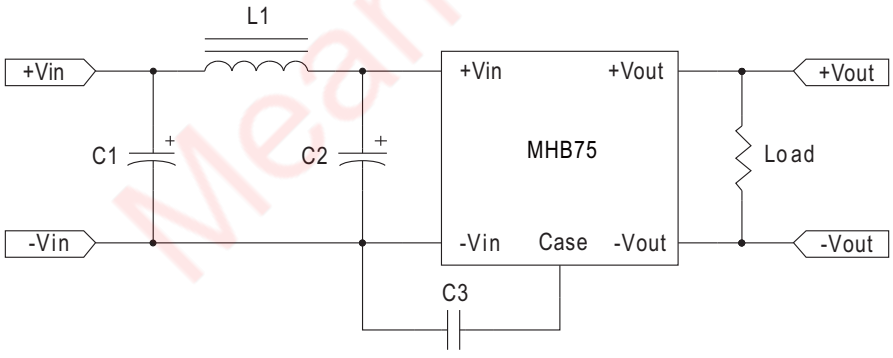

Model No.	C1	C2	C3	L1
MHB75-12S□	100uF/50V ESR<0.33Ω	100uF/50V ESR<0.33Ω	1000pF	1.5uH
MHB75-24S□	100uF/50V ESR<0.33Ω	100uF/50V ESR<0.33Ω	1000pF	1.5uH
MHB75-48S□	33uF/100V ESR<0.46Ω	33uF/100V ESR<0.46Ω	2200pF	8.3uH

□ =05,12,24

Mean Well Brasil

LRI Distribuída no Brasil pela LRI | vendas@lri.com.br | 51 2129-3000

■ Packing

Standard Packing	MPQ Per Tray(PCS)	One EPE Tray G.W.	Max. Q'TY/ Carton(PCS)	One Carton G.W.
Unit : mm 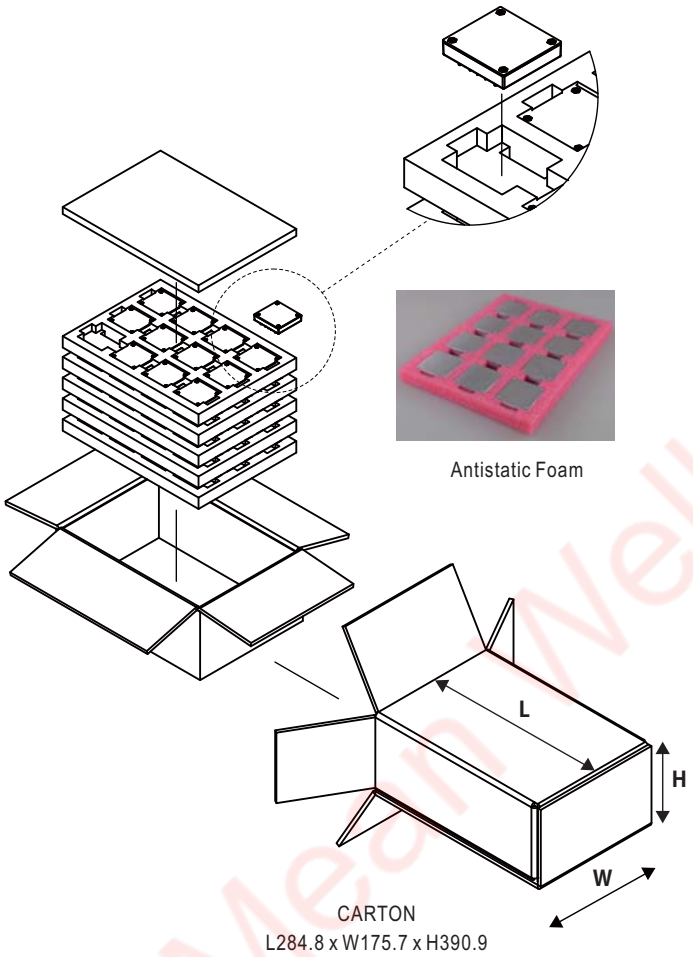 Antistatic Foam CARTON L284.8 x W175.7 x H390.9	12	1.14Kg	60	7.2Kg

■ Installation Manual

Please refer to : http://www.meanwell.com/manual.html

Mean Well Brasil

LRI Distribuída no Brasil pela LRI | vendas@lri.com.br | 51 2129-3000