30W High Reliable Green Medical On Board Type

MFM-30 series

User's Manual





ANSI/AAMI ES60601-1 BS EN/EN60601-1 IEC60601-1 TPTC004

Features

- 2.58"x1.38" compact size
- Medical safety approved (2 x MOPP) according to ANSI/AAMI ES60601-1 and IEC/BS EN/EN60601-1
- Suitable for BF application with appropriate system consideration
- No load power consumption<0.075W
- Extremely low leakage current
- Wide operating temp. range -40 ~ +85℃
- EMI class B for class Ⅱ configuration
- Protections: Short circuit / Overload / Over voltage
- No minimum load required
- 3 years warranty

Applications

- Portable medical device
- Mobile clinical workstation
- Medical computer monitor
- Medical examination instrument

GTIN CODE

MW Search: https://www.meanwell.com/serviceGTIN.aspx

Description

MFM-30 is a 30W high density and small size (65.5x35x23mm) AC/DC on board type medical power supply series offered in pin type . It features the operation for 80~264VAC, a low no load power consumption less than 0.075W, a high efficiency up to 91%, Class Ⅱ (no FG) double insulation, outstanding dissipation, 3G anti-vibration, high EMC performance, 4KVAC isolation, etc. The design observes IEC/BS EN/EN60601-1 and ANSI/AAMI ES60601-1version three with 2 x MOPP level and ultra-low leakage current (<80μA). It is very suitable for BF (patient contact) type medical device or relevant equipment.

Model Encoding

MFM - 30 - 5

- 5 — Output voltage
- 30 — Rated wattage
- MFM — Series name

Mean Well Brasil

SPECIFICATION

MODEL		MFM-30-3.3	MFM-30-5	MFM-30-12	MFM-30-15	MFM-30-24	MFM-30-48
OUTPUT	DC VOLTAGE	3.3V	5V	12V	15V	24V	48V
	RATED CURRENT	6A	6A	2.5A	2A	1.3A	0.63A
	CURRENT RANGE Note.2	0 ~ 6A	0 ~ 6A	0 ~ 2.5A	0 ~ 2A	0 ~ 1.3A	0 ~ 0.63A
	PEAK CURRENT	7.8A	6.9A	2.9A	2.3A	1.5A	0.73A
	RATED POWER	19.8W	30W	30W	30W	31.2W	30.2W
	PEAK LOAD(10sec.) Note.3	25.7W	34.5W	34.8W	34.5W	36W	35W
	RIPPLE & NOISE (max.) Note.4	80mVp-p	80mVp-p	120mVp-p	120mVp-p	200mVp-p	200mVp-p
	VOLTAGE TOLERANCE Note.5	±2.0%	±2.0%	±2.0%	±2.0%	±2.0%	±2.0%
	LINE REGULATION	±0.5%	±0.5%	±0.5%	±0.5%	±0.5%	±0.5%
	LOAD REGULATION	±1.0%	±1.0%	±0.5%	±0.5%	±0.5%	±0.5%
	SETUP, RISE TIME	500ms, 30ms/230VAC 500ms, 30ms/115VAC at full load					
	HOLD UP TIME (Typ.)	40ms/230VAC 12ms/115VAC at full load					
INPUT	VOLTAGE RANGE Note.6	80 ~ 264VAC					
	FREQUENCY RANGE	47 ~ 63Hz					
	EFFICIENCY (Typ.)	82.5%	86.5%	90%	89%	90%	91%
	AC CURRENT (Typ.)	0.75A/115VAC 0.5A/230VAC					
	INRUSH CURRENT (Typ.)	COLD START 25A/115VAC 45A/230VAC					
	LEAKAGE CURRENT (max.) Note.7	Touch current <80μA/264VAC					
PROTECTION	OVERLOAD	115% ~ 165% rated output power					
		Protection type : Hiccup mode, recovers automatically after fault condition is removed					
	OVER VOLTAGE	3.5 ~ 4.5V	5.3 ~ 6.8V	12.6 ~ 16.2V	15.8 ~ 20.3V	25.2 ~ 32.4V	50.4 ~ 64V
		Protection type : Shut down o/p voltage, re-power on to recover					
ENVIRONMENT	WORKING TEMP.	-40 ~ +85℃ (Refer to "Derating Curve")					
	WORKING HUMIDITY	20 ~ 90% RH non-condensing					
	STORAGE TEMP., HUMIDITY	-40 ~ +85℃, 10 ~ 95% RH					
	TEMP. COEFFICIENT	±0.03%/℃ (0 ~ 60℃)					
	SOLDERING TEMPERATURE	Wave soldering: 265℃,5s (max.); Manual soldering: 390℃,3s (max.)					
	VIBRATION	10 ~ 500Hz, 3G 10min./1cycle, period for 60min. each along X, Y, Z axes					
	OPERATING ALTITUDE Note.8	5000 meters					
SAFETY & EMC (Note 9)	SAFETY STANDARDS	IEC60601-1, BS EN/EN60601-1, EAC TP TC 004, UL ANSI/AAMI ES60601-1(3.1 version), CAN/CSA-C22 3rd Edition approved; Design refer to BS EN/EN60335-1(by request)					
	ISOLATION LEVEL	Primary-Secondary: 2xMOPP					
	WITHSTAND VOLTAGE	I/P-O/P:4KVAC					
	ISOLATION RESISTANCE	I/P-O/P:100M Ohms / 500VDC / 25℃/ 70% RH					
	EMC EMISSION	**Parameter**		**Standard**		**Test Level / Note**	
		Conducted		BS EN/EN55011 (CISPR11)		Class B	
		Radiated		BS EN/EN55011 (CISPR11)		Class B	
		Harmonic Current		BS EN/EN61000-3-2		Class A	
		Voltage Flicker		BS EN/EN61000-3-3		-----	
	EMC IMMUNITY	BS EN/EN55035, BS EN/EN60601-1-2					
		Parameter		**Standard**		**Test Level / Note**	
		ESD		BS EN/EN61000-4-2		Level 4, 15KV air ; Level 4, 8KV contact	
		RF field susceptibility		BS EN/EN61000-4-3		Level 3, 10V/m(80MHz~2.7GHz) Table 9, 9~28V/m(385MHz~5.78GHz)	
		EFT bursts		BS EN/EN61000-4-4		Level 3, 2KV	
		Surge susceptibility		BS EN/EN61000-4-5		Level 3, 1KV/Line-Line	
		Conducted susceptibility		BS EN/EN61000-4-6		Level 3, 10V	
		Magnetic field immunity		BS EN/EN61000-4-8		Level 4, 30A/m	
		Voltage dip, interruption		BS EN/EN61000-4-11		100% dip 1 periods, 30% dip 25 periods, 100% interruptions 250 periods	
OTHERS	MTBF	6325.8K hrs min. Telcordia SR-332 (Bellcore) ; 778.9K hrs min. MIL-HDBK-217F (25℃)					
	DIMENSION	65.5*35*23mm (L*W*H) or 2.58″*1.38″*0.90″ inch					
	PACKING	0.053Kg; 144pcs/8.6Kg/0.97CUFT					

NOTE

1. All parameters NOT specially mentioned are measured at 230VAC input, rated load and 25℃ of ambient temperature.
2. No minimum load required.
3. 33% Duty cycle maximum within every 30 seconds. Average output power should not exceed the rated power.
4. Ripple & noise are measured at 20MHz of bandwidth by using a 12" twisted pair-wire terminated with a 0.1 μF & 47 μF parallel capacitor.
5. Tolerance : includes set up tolerance, line regulation and load regulation.
6. Derating may be needed under low input voltages. Please check the derating curve for more details.
7. Touch current was measured from primary input to DC output.
8. The ambient temperature derating of 3.5℃/1000m with fanless models and of 5℃/1000m with fan models for operating altitude higher than 2000m(6500ft).
9. The power supply is considered a component which will be installed into a final equipment. The final equipment must be re-confirmed that it still meets EMC directives. For guidance on how to perform these EMC tests, please refer to “EMI testing of component power supplies.” (as available on https://www.meanwell.com//Upload/PDF/EMI_statement_en.pdf)

※ Product Liability Disclaimer : For detailed information, please refer to https://www.meanwell.com/serviceDisclaimer.aspx

Mean Well Brasil

LRI Distribuída no Brasil pela LRI | vendas@lri.com.br | 51 2129-3000

■ Block Diagram

fosc : 65KHz

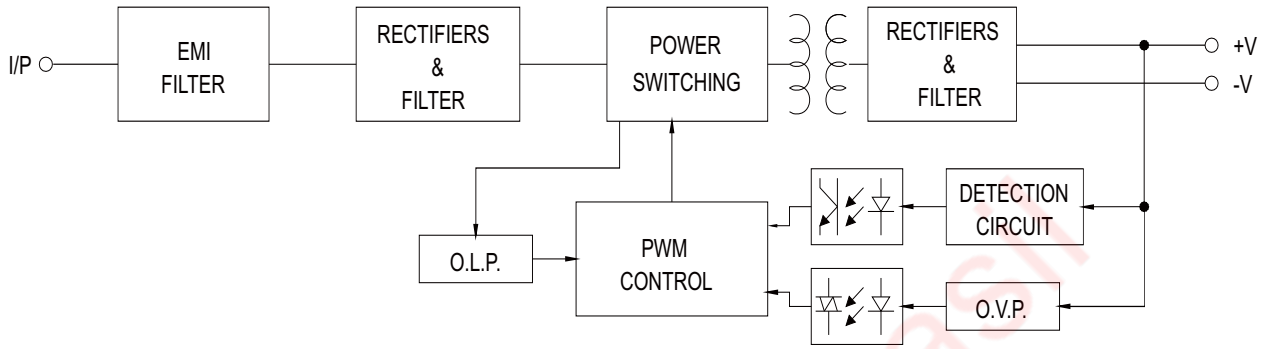

■ Derating Curve

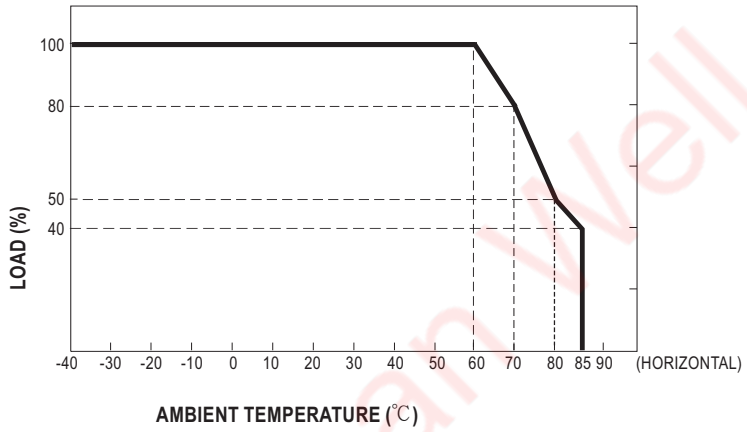

■ Output Derating VS Input Voltage

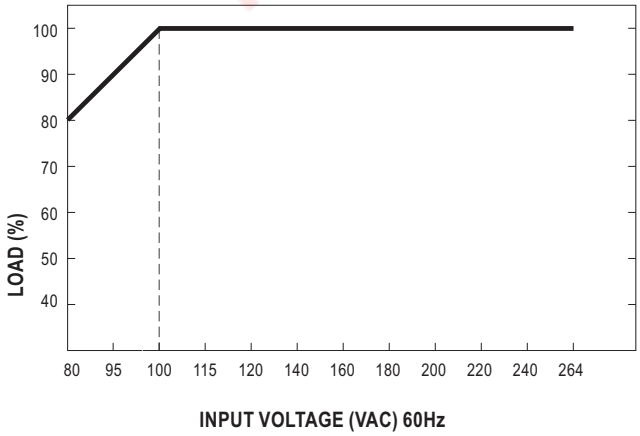

Mean Well Brasil

■ Mechanical Specification

Unit:inch(mm)

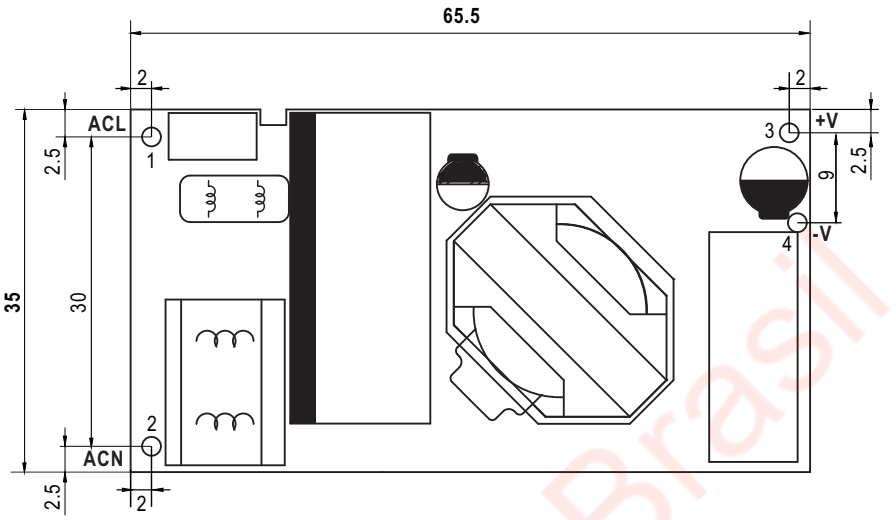

TOP VIEW

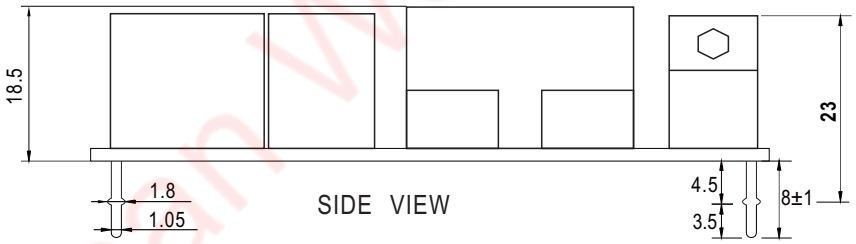

SIDE VIEW

■ Installation Manual

Please refer to : http://www.meanwell.com/manual.html

Mean Well Brasil