5W High Reliable Green Medical On Board Type

MFM-05 series

User's Manual



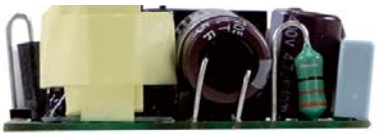

ANSI/AAMI ES60601-1 BS EN/EN60601-1 IEC60601-1 TPTC004

Features

- 1.65"x0.88" compact size
- Medical safety approved (2 x MOPP) according to ANSI/AAMI ES60601-1 and IEC/BS EN/EN60601-1
- Suitable for BF application with appropriate system consideration
- No load power consumption<0.075W
- Extremely low leakage current
- Wide operating temp. range -40 ~ +85℃
- EMI class B for class Ⅱ configuration
- Protections:
  Short circuit / Overload / Over voltage / Over temperature
- No minimum load required
- Typical lifetime > 52K hours
- 3 years warranty

Applications

- Portable medical device
- Mobile clinical workstation
- Medical computer monitor
- Medical examination instrument

GTIN CODE

MW Search: https://www.meanwell.com/serviceGTIN.aspx

Description

MFM-05 is a 5W high density and small size (42*22.3*20.5mm) AC/DC on board type medical grade power supply series. It features the operation for 80~264VAC, a low no load power consumption less than 0.075W, a high efficiency up to 82%, Class Ⅱ (no FG) double insulation, outstanding dissipation, 5G anti-vibration, high EMC performance, 4KVAC isolation, etc. The design observes IEC/BS EN/EN60601-1 and ANSI/AAMI ES60601-1 version three with 2xMOPP level and ultra-low leakage current (<80 μA). It is very suitable for BF (patient contact) type medical device or relevant equipment.

Model Encoding

MFM - 05 - 5

- 5 — Output voltage
- 05 — Rated wattage
- MFM — Series name

Mean Well Brasil

SPECIFICATION

MODEL		MFM-05-3.3	MFM-05-5	MFM-05-12	MFM-05-15	MFM-05-24
OUTPUT	DC VOLTAGE	3.3V	5V	12V	15V	24V
	RATED CURRENT	1.25A	1A	0.42A	0.33A	0.23A
	CURRENT RANGE Note.2	0 ~ 1.25A	0 ~ 1A	0 ~ 0.42A	0 ~ 0.33A	0 ~ 0.23A
	PEAK CURRENT	1.38A	1.1A	0.46A	0.36A	0.25A
	RATED POWER	4.1W	5W	5W	5W	5.5W
	PEAK LOAD(10sec.) Note.3	4.6W	5.5W	5.5W	5.4W	6W
	RIPPLE & NOISE (max.) Note.4	100mVp-p	100mVp-p	150mVp-p	150mVp-p	180mVp-p
	VOLTAGE TOLERANCE Note.5	±2.5%	±2.5%	±2.5%	±2.5%	±2.5%
	LINE REGULATION	±0.3%	±0.3%	±0.3%	±0.3%	±0.3%
	LOAD REGULATION	±0.5%	±0.5%	±0.5%	±0.5%	±0.5%
	SETUP, RISE TIME	1000ms, 30ms/230VAC 1000ms, 30ms/115VAC at full load				
	HOLD UP TIME (Typ.)	40ms/230VAC 12ms/115VAC at full load				
INPUT	VOLTAGE RANGE Note.6	80 ~ 264VAC				
	FREQUENCY RANGE	47 ~ 440Hz				
	EFFICIENCY (Typ.)	74%	78%	80%	81%	82%
	AC CURRENT (Typ.)	0.2A/115VAC 0.1A/230VAC				
	INRUSH CURRENT (Typ.)	COLD START 25A/115VAC 45A/230VAC				
	LEAKAGE CURRENT (max.) Note.7	Touch current <80μA/264VAC				
PROTECTION	OVERLOAD	110% ~ 180% rated output power				
		Protection type : Hiccup mode, recovers automatically after fault condition is removed				
	OVER VOLTAGE	3.8 ~ 5V	5.75 ~ 6.8V	13.8 ~ 16.2V	17.3 ~ 20.3V	27.6 ~ 32.4V
		Protection type : Shut off o/p voltage, clamping by zener diode				
	OVER TEMPERATURE	Protection type : Shut down o/p voltage, recovers automatically after temperature goes down				
ENVIRONMENT	WORKING TEMP.	-40 ~ +85℃ (Refer to "Derating Curve")				
	WORKING HUMIDITY	20 ~ 90% RH non-condensing				
	STORAGE TEMP., HUMIDITY	-40 ~ +100℃, 10 ~ 95% RH non-condensing				
	TEMP. COEFFICIENT	±0.03%/℃ (0 ~ 60℃)				
	SOLDERING TEMPERATURE	Wave soldering: 265℃,5s (max.); Manual soldering: 390℃,3s (max.)				
	VIBRATION	10 ~ 500Hz, 5G 10min./1cycle, period for 60min. each along X, Y, Z axes				
	OPERATING ALTITUDE Note.8	5000 meters				
SAFETY & EMC (Note 9)	SAFETY STANDARDS	IEC60601-1, BS EN/EN60601-1, EAC TP TC 004, UL ANSI/AAMI ES60601-1(3.1 version), CAN/CSA-C22 3rd Edition approved ; Design refer to BS EN/EN60335-1(by request)				
	ISOLATION LEVEL	Primary-Secondary: 2xMOPP				
	WITHSTAND VOLTAGE	I/P-O/P:4KVAC				
	ISOLATION RESISTANCE	I/P-O/P:100M Ohms / 500VDC / 25℃/ 70% RH				
	EMC EMISSION	**Parameter**	**Standard**	**Test Level / Note**		
		Conducted	BS EN/EN55011 (CISPR11)	Class B		
		Radiated	BS EN/EN55011 (CISPR11)	Class B		
		Harmonic Current	BS EN/EN61000-3-2	Class A		
		Voltage Flicker	BS EN/EN61000-3-3	-----		
	EMC IMMUNITY	BS EN/EN55035, BS EN/EN60601-1-2				
		Parameter	**Standard**	**Test Level / Note**		
		ESD	BS EN/EN61000-4-2	Level 4, 15KV air ; Level 4, 8KV contact		
		RF field susceptibility	BS EN/EN61000-4-3	Level 3, 10V/m(80MHz~2.7GHz) Table 9, 9~28V/m(385MHz~5.78GHz)		
		EFT bursts	BS EN/EN61000-4-4	Level 3, 2KV		
		Surge susceptibility	BS EN/EN61000-4-5	Level 3, 1KV/Line-Line		
		Conducted susceptibility	BS EN/EN61000-4-6	Level 3, 10V		
		Magnetic field immunity	BS EN/EN61000-4-8	Level 4, 30A/m		
		Voltage dip, interruption	BS EN/EN61000-4-11	100% dip 1 periods, 30% dip 25 periods, 100% interruptions 250 periods		
OTHERS	MTBF	9337.3K hrs min. Telcordia SR-332 (Bellcore) ; 1799.5K hrs min. MIL-HDBK-217F (25℃)				
	DIMENSION	42*22.3*20.5mm (L*W*H) or 1.65"*0.88"0.80" inch				
	PACKING	0.018Kg; 270pcs/5.8Kg/0.94CUFT				

NOTE

1. All parameters NOT specially mentioned are measured at 230VAC input, rated load and 25℃ of ambient temperature.
2. No minimum load required.
3. 33% Duty cycle maximum within every 30 seconds. Average output power should not exceed the rated power
4. Ripple & noise are measured at 20MHz of bandwidth by using a 12" twisted pair-wire terminated with a 0.1 μF & 47 μF parallel capacitor.
5. Tolerance : includes set up tolerance, line regulation and load regulation.
6. Derating may be needed under low input voltages. Please check the derating curve for more details.
7. Touch current was measured from primary input to DC output.
8. The ambient temperature derating of 3.5℃/1000m with fanless models and of 5℃/1000m with fan models for operating altitude higher than 2000m(6500ft).
9. The power supply is considered a component which will be installed into a final equipment. The final equipment must be re-confirmed that it still meets EMC directives. For guidance on how to perform these EMC tests, please refer to "EMI testing of component power supplies." (as available on https://www.meanwell.com//Upload/PDF/EMI_statement_en.pdf)

※ Product Liability Disclaimer : For detailed information, please refer to https://www.meanwell.com/serviceDisclaimer.aspx

Mean Well Brasil

LRI Distribuída no Brasil pela LRI | vendas@lri.com.br | 51 2129-3000

■ Block Diagram

fosc : 100KHz

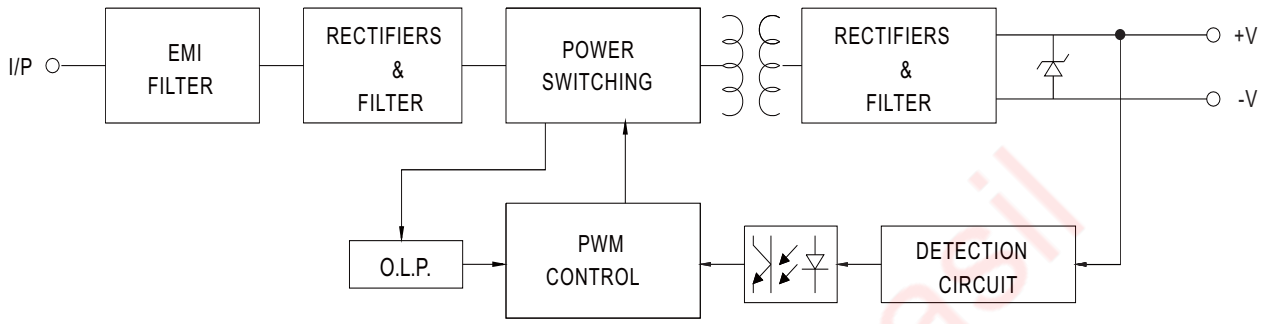

■ Derating Curve

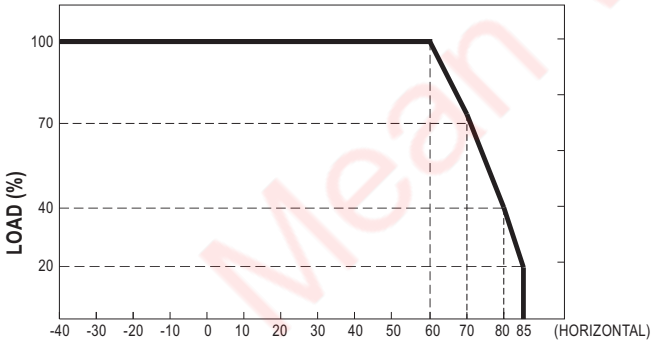

AMBIENT TEMPERATURE (℃)

■ Output Derating VS Input Voltage

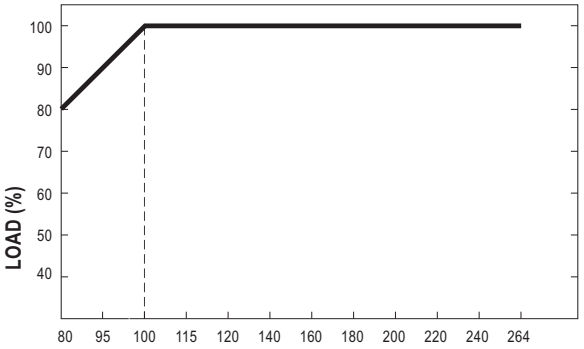

INPUT VOLTAGE (VAC) 60Hz

Mean Well Brasil

■ Mechanical Specification

Unit: mm

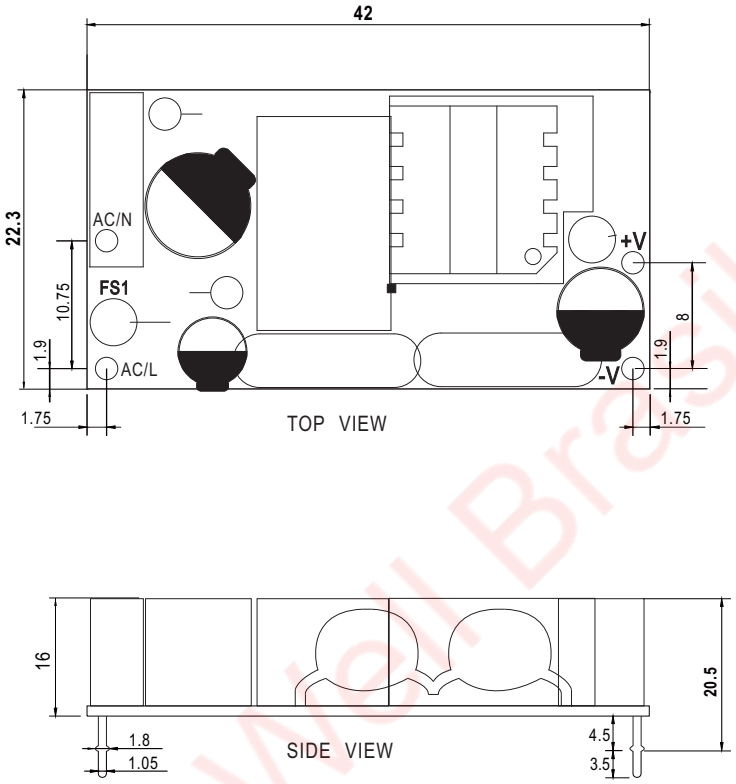

■ Installation Manual

Please refer to : http://www.meanwell.com/manual.html

Mean Well Brasil