600W Single Output High Peak Power Supply LRS-600N2 series

User's Manual
Click Me



EN61558-1
EN61558-2-16

IS 13252(Part 1)
R-41179035
www.bis.gov.in
(except for 48V)

CNS15598-1

(Note.8)

TPTC004

IEC62368-1
IEC61558-1
IEC61558-2-16

UL62368-1

(Note.7)

ECO Automate Industrial Security Network Telecom

Features

- AC input range selectable by switch
- Withstand 300VAC surge input for 5 second
- Up to 200% peak power capability
- Protections: Short circuit / Overload / Over voltage / Over temperature
- Forced air cooling
- Built-in cooling Fan ON-OFF control
- Compliance to IEC/BS EN/EN61558-1 and 62368-1
- Withstand 5G vibration test
- Over voltage category III(OVC III)
- High operating temperature up to 65℃
- Operating altitude up to 2000 meters
- 3 years warranty

Applications

- Industrial automation machinery
- Industrial control system
- Mechanical and electrical equipment
- Electronic instruments, equipments or apparatus
- For Inductive and capacitive load

GTIN CODE

MW Search: https://www.meanwell.com/serviceGTIN.aspx

Description

LRS-600N2 series is a 600W single-output enclosed type power supply with 41mm of low profile design. Adopting the input of 115VAC or 230VAC (select by switch), the entire series provides an output voltage line of 12V, 24V, 36V and 48V.In addition to the high efficiency up to 92%, with the built-in long life fan LRS-600N2 can work under -20~+65℃ with full load. LRS-600N2 has the complete protection functions and 5G anti-vibration capability; It is complied with complete international safety regulations. LRS-600N2 series serves as a high price-to-performance power supply solution for various industrial applications. Moreover, LRS-600N2 can provide 200% short-duration peak power for motor applications and electromechanical loads requiring much higher power during start-up.

Model Encoding

LRS - 600 N2 - 24

- 24 → Output voltage(12/24/36/48V)
- N2 → 2 times peak power
- 600 → Output power
- LRS → Series name

Distribuída no Brasil pela LRI | vendas@lri.com.br | 51 2129-3000

SPECIFICATION

MODEL		LRS-600N2-12	LRS-600N2-24	LRS-600N2-36	LRS-600N2-48
OUTPUT	DC VOLTAGE	12V	24V	36V	48V
	RATED CURRENT	50A	25A	16.6A	12.5A
	CURRENT RANGE	0 ~ 50A	0 ~ 25A	0 ~ 16.6A	0 ~ 12.5A
	RATED POWER	600W	600W	597.6W	600W
	RIPPLE & NOISE (max.) Note.2	200mVp-p	240mVp-p	360mVp-p	360mVp-p
	VOLTAGE ADJ. RANGE Note.3	11.4 ~ 13.2V	22.8 ~ 26.4V	34.2 ~ 39.6V	45.6 ~ 52.8V
	VOLTAGE TOLERANCE	±1.5%	±1.0%	±1.0%	±1.0%
	LINE REGULATION	±0.5%	±0.5%	±0.5%	±0.5%
	LOAD REGULATION	±1.0%	±0.5%	±0.5%	±0.5%
	SETUP, RISE TIME Note.4	1300ms, 50ms/230VAC 1300ms,50ms/115VAC at full load			
	HOLD UP TIME (Typ.)	20ms/230VAC 16ms/115VAC at full load			
INPUT	VOLTAGE RANGE	90 ~ 132VAC / 180 ~ 264VAC by switch 255 ~ 370VDC (swith on 230VAC)			
	FREQUENCY RANGE	47 ~ 63Hz			
	EFFICIENCY (Typ.)	90%	91%	92%	92%
	AC CURRENT (Typ.)	12A/115VAC 7.5A/230VAC			
	INRUSH CURRENT (Typ.)	35A/115VAC 60A/230VAC			
	LEAKAGE CURRENT	<2mA / 240VAC			
PROTECTION (Note.5)	OVER LOAD	Output power >105% rated for more than 5 seconds then shut down o/p voltage, re-power on to recover			
		Constant current limiting for output power >200% rated for more than 5 seconds and then shut down o/p voltage, re-power on to recover			
	OVER VOLTAGE	13.8 ~ 16.2V	27.6 ~ 32.4V	41.4 ~ 48.6V	55.2 ~ 64.8V
		Protection type : Shut down o/p voltage, re-power on to recover			
	OVER TEMPERATURE	Shut down o/p voltage, re-power on to recover			
FUNCTION	FAN ON/OFF CONTROL (Typ.)	RTH3≧50℃ FAN ON, ≦40℃ FAN OFF			
ENVIRONMENT	WORKING TEMP.	-20 ~ +65℃ (Refer to "Derating Curve")			
	WORKING HUMIDITY	20 ~ 90% RH non-condensing			
	STORAGE TEMP., HUMIDITY	-40 ~ +85℃, 10 ~ 95% RH			
	TEMP. COEFFICIENT	±0.03%/℃ (0 ~ 50℃)			
	VIBRATION	10 ~ 500Hz, 5G 10min./1cycle, 60min. each along X, Y, Z axes			
	OVER VOLTAGE CATEGORY	Ⅲ : According to EN61558, EN50178, EN60664-1, EN62477-1 ; altitude up to 2000 meters			
SAFETY & EMC (Note.6)	SAFETY STANDARDS	BS IEC/UL 62368-1, EAC TP TC 004, BIS IS13252(Part1):2010/IEC60950-1:2005(except for 48V), BSMI CNS15598-1,GB 4943.1, BS EN/EN61558-1,BS EN/EN61558-2-16, design refer to AS/NZS61558.1/2.16,AS/NZS62368.1			
	WITHSTAND VOLTAGE	I/P-O/P:3.75KVAC I/P-FG:2KVAC O/P-FG:0.5KVAC			
	ISOLATION RESISTANCE	I/P-O/P, I/P-FG, O/P-FG:100M Ohms/500VDC / 25℃/ 70% RH			
	EMC EMISSION	Compliance to EAC TP TC 020, BSMI CNS15936			
	EMC IMMUNITY	Compliance to EAC TP TC 020			
OTHERS	MTBF	1336.2K hrs min. Telcordia SR-332(Bellcore) ; 230.8 K hrs min. MIL-HDBK-217F (25℃)			
	DIMENSION	225*124*41mm (L*W*H)			
	PACKING	0.95Kg/12pcs/12.4Kg/0.77CUFT			

NOTE

1. All parameters NOT specially mentioned are measured at 230VAC input, rated load and 25℃ of ambient temperature.
2. Ripple & noise are measured at 20MHz of bandwidth by using a 12" twisted pair-wire terminated with a 0.1uf & 47uf parallel capacitor.
3. Voltage adjustment can only be operated within the input range of 100~120VAC or 200-240VAC.
   If the voltage adjustment is performed outside this range, it may cause abnormal output.
4. Length of set up time is measured at cold start. Turning the power supply on/off frequently may lead to increase of the set up time.
5. Once protections are triggered, 4min(Typ.) of cold down time is required before restart.
6. The power supply is considered a component which will be installed into a final equipment. All the EMC tests are been executed by mounting the unit on a 360mm*360mm metal plate with 1mm of thickness. The final equipment must be re-confirmed that it still meets EMC directives. For guidance on how to perform these EMC tests, please refer to “EMI testing of component power supplies.” (as available on https://www.meanwell.com//Upload/PDF/EMI_statement_en.pdf)
7. This power supply does not meet the harmonic current requirements outlined by EN61000-3-2. Please do not use this power supply under the following conditions:
   a) the end-devices is used within the European Union, and
   b) the end-devices is connected to public mains supply with 220Vac or greater rated nominal voltage, and
   c) the power supply is:
      - installed in end-devices with average or continuous input power greater than 75W, or
      - belong to part of a lighting system

   Exception:
   Power supplies used within the following end-devices do not need to fulfill EN61000-3-2
   a) professional equipment with a total rated input power greater than 1000W;
   b) symmetrically controlled heating elements with a rated power less than or equal to 200W
8. RCM is on voluntary basis and meets relevant IEC or AS/NZS standards complying with AS/NZS 4417.1

※ Product Liability Disclaimer : For detailed information, please refer to https://www.meanwell.com/serviceDisclaimer.aspx

LRI Distribuída no Brasil pela LRI | vendas@lri.com.br | 51 2129-3000

Block Diagram

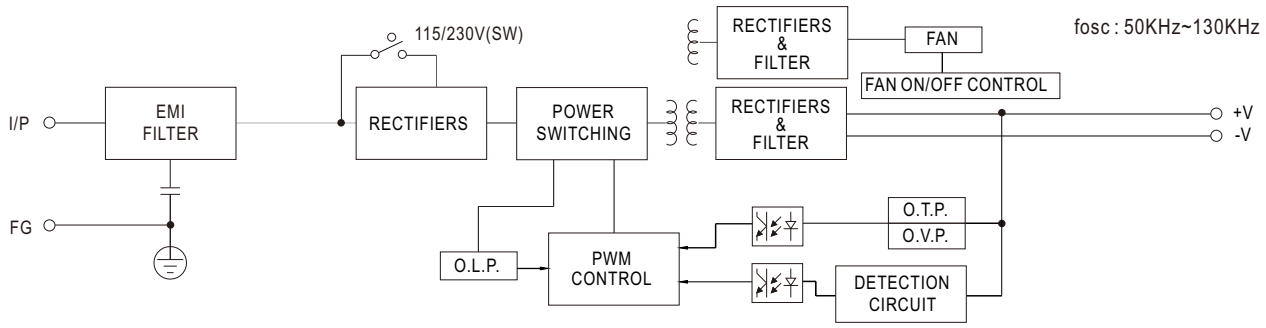

Derating Curve

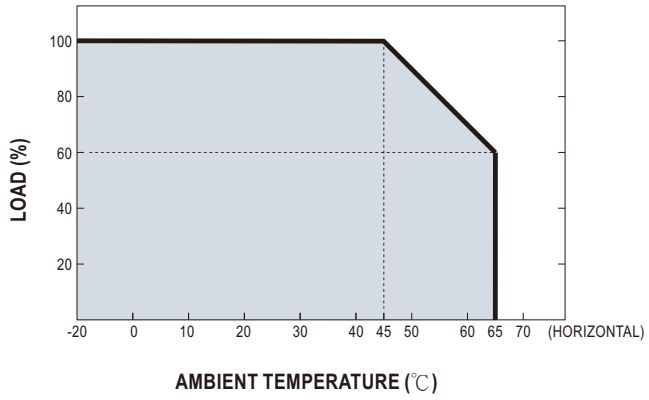

Static Characteristics

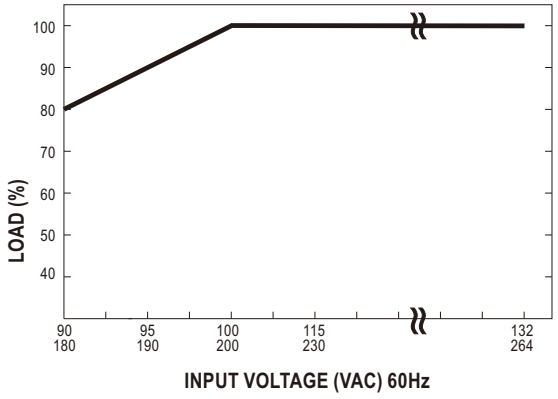

LRI Distribuída no Brasil pela LRI | vendas@lri.com.br | 51 2129-3000

■ Function Manual

1.Peak Power

$$P_{av} = \frac{P_{pk} \times t + P_{npk} \times (T-t)}{T} \leqslant P_{rated}$$

$$Duty = \frac{t}{T} \times 100\% \leqslant 35\%$$

$t \leqslant 5$ sec

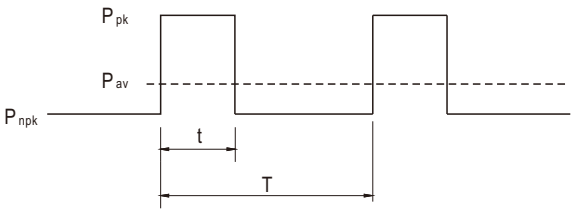

P_{av} : Average output power (W)

P_{pk} : Peak output power (W)

P_{npk} : Non-peak output power (W)

P_{rated} : Rated output power (W)

t : Peak power width (sec)

T: Period (sec)

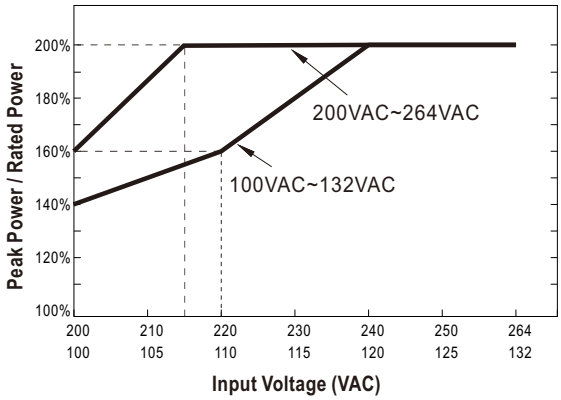

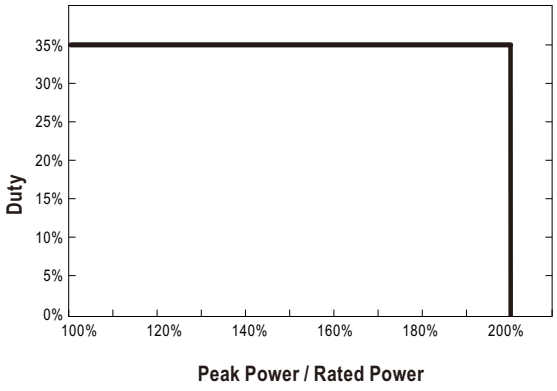

For example (24V model)

V_{in}=220VAC, Duty_max=10%

$P_{av}=P_{rated}$=600W

P_{pk}=1000W

t≤5sec

$$T \geq \frac{5sec}{10\%} = 50sec$$

$$P_{npk} \leq \frac{TP_{av}-tP_{pk}}{T-t} = 555.5W$$

LRI Distribuída no Brasil pela LRI | vendas@lri.com.br | 51 2129-3000

■ Mechanical Specification

Case No. 292 Unit:mm Tolerance:±1

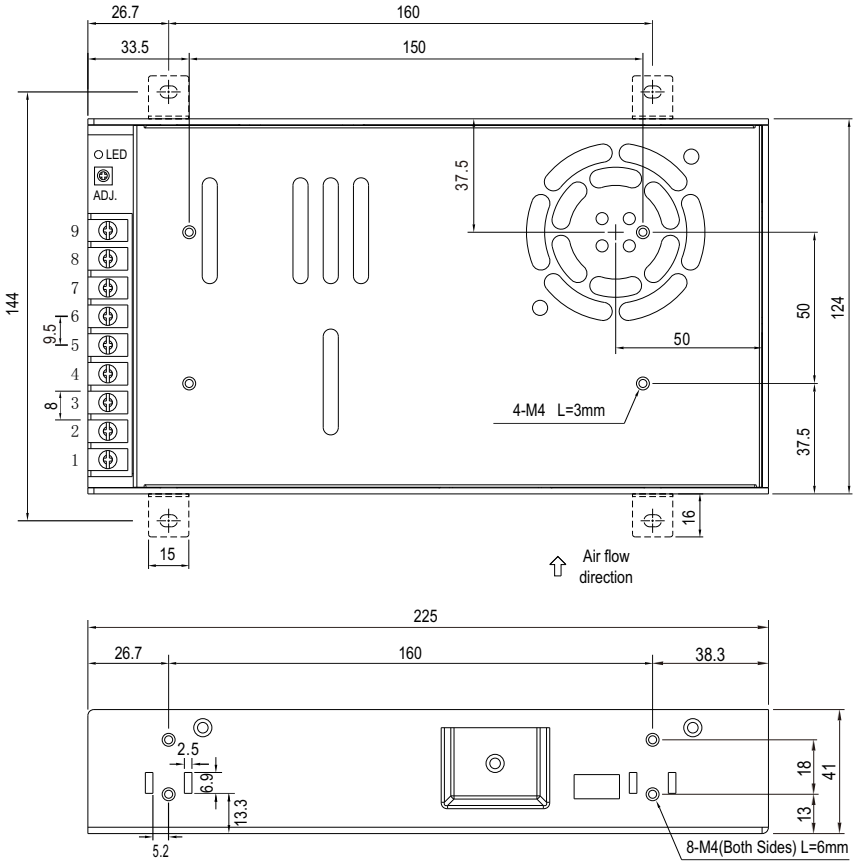

Terminal Pin No. Assignment :

Pin No.	Assignment	Pin No.	Assignment
1	AC/L	4~6	DC OUTPUT -V
2	AC/N	7~9	DC OUTPUT +V
3	FG ⏚		

■ Installation Manual

Please refer to : http://www.meanwell.com/manual.html

LRI Distribuída no Brasil pela LRI | vendas@lri.com.br | 51 2129-3000