DC-DC Constant Current Step-Down LED driver — LDD-H series

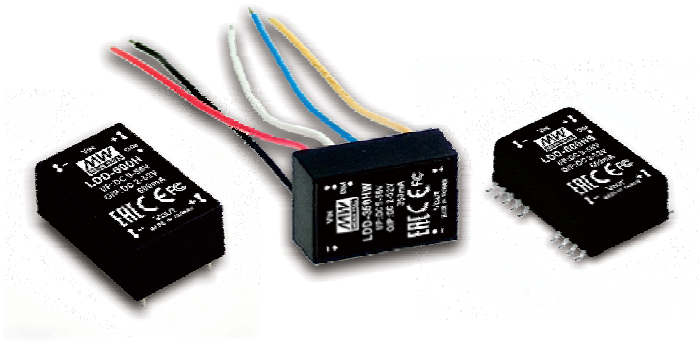

Features :

- DC/DC step-down converter
- Constant current output: 300mA to 1500mA
- Wide input voltage: 9 ~ 56VDC
- Wide output LED string voltage: 2 ~ 52VDC
- High efficiency up to 97%
- Built-in EMI filter, comply with BS EN/EN55015 and FCC part15 without additional input filter and capacitors
- Built-in PWM and remote ON/OFF control
- Protections: Short circuit / Over temperature
- Cooling by free air convection
- Fully encapsulated with IP67 level for pin and wire style
- Non-potted, optional conformal coating for SMD style (Order No.: LDD-350-1000HSC)
- Compact size
- Low cost, high reliability
- Suitable for driving illumination LED
- 3 years warranty

GTIN CODE

MW Search: https://www.meanwell.com/serviceGTIN.aspx

LDD-350H□ Blank : pin style
W : wire style
S : SMD style

LDD-1200H△ Blank : pin style
W : wire style

SPECIFICATION

ORDER NO.			LDD-300H□	LDD-350H□	LDD-500H□	LDD-600H□	LDD-700H□	LDD-1000H□	LDD-1200H△	LDD-1500H△
OUTPUT	CURRENT RANGE		300mA	350mA	500mA	600mA	700mA	1000mA	1200mA	1500mA
	VOLTAGE RANGE	Note.4	2 ~ 52VDC						2 ~ 46VDC	
	CURRENT ACCURACY (Typ.)		±3% at 24VDC input ; ±4% at 48VDC input for LDD-H/HW ; ±5% for LDD-HS							
	RIPPLE & NOISE(max.)	Note.2	150mVp-p	150mVp-p	150mVp-p	200mVp-p	200mVp-p	350mVp-p	350mVp-p	350mVp-p
	SWITCHING FREQENCY		40KHz ~ 1000KHz							
	EXTERNAL CAPACITANCE LOAD (max.)		2.2uF							
INPUT	VOLTAGE RANGE		9 ~ 56VDC						9 ~ 52VDC	
	EFFICIENCY (max.)		97% at full load and 36VDC/48VDC input for LDD-H/HW ; 96% at full load and 36VDC/48VDC input for LDD-HS							
	DC CURRENT	Full load Note.3	270mA	320mA	450mA	550mA	650mA	900mA	1100mA	1360mA
		No load	5mA							
	FILTER		Capacitor							
PWM DIMMING & ON/OFF CONTROL	REMOTE ON/OFF		Leave open if not use							
			Power ON with dimming: DIM ~ -Vin >2.5 ~ 6VDC or open circuit							
			Power OFF : DIM ~ -Vin < 0.8VDC or short							
	PWM FREQUENCY		100 ~ 1KHz							
	QUIESCENT INPUT CURRENT IN SHUTDOWN MODE(max.)		1mA at PWM dimming OFF and 24VDC input							
PROTECTION	SHORT CIRCUIT		Regulated at rated output current							
			Protection type: Can be continued, recovers automatically after fault condition is removed							
	OVER TEMPERATURE		Tj 150℃ typically(IC1) detect on main control IC							
			Protection type : Shut down, recovers automatically after temperature goes down							
ENVIRONMENT	WORKING TEMP.		-40 ~ + 85℃(Refer to derating curve)							
	WORKING HUMIDITY		20% ~ 90% RH non-condensing for LDD-H/HW ; 20%~85% RH non-condensing for LDD-HS							
	STORAGE TEMP., HUMIDITY		-55 ~ +125℃, 10 ~ 95% RH							
	TEMP. COEFFICIENT		±0.03% / ℃							
	VIBRATION		10 ~ 500Hz, 2G 10min./1 cycle, period for 60min. each along X, Y, Z axes							
	OPERATING CASE TEMP. (max.)		100℃							
EMC	SAFETY STANDARDS		EAC TP TC 020/2011 approved							
	EMC EMISSION		Compliance to BS EN/EN55015, FCC part 15 class B, EAC TP TC 020							
	EMC IMMUNITY		Compliance to BS EN/EN61000-4-2,3,4,6,8, light industry level, criteria A, EAC TP TC 020							
OTHERS	MTBF		1000Khrs min. MIL-HDBK-217F (25℃)							
	DIMENSION		31.8*20.3*12.2mm or 1.25"*0.8"*0.48" inch (L*W*H) for LDD-H/HW ; 31.8*20.3*11.4mm or 1.25"*0.8"*0.45" inch (L*W*H) for LDD-HS							
	WEIGHT		LDD-H:15.6g ; LDD-HW:18g ; LDD-HS:12.8g							
	POTTING MATERIAL		Expoxy(UL94-V0) for LDD-H/HW ; without potted for LDD-HS							

NOTE

1.All parameters are specified at normal input(48VDC), rated load, 25℃ 70% RH ambient.
2.Ripple & noise are measured at 20MHz by using a 12" twisted pair terminated with a 0.1uf capacitor.
3.Test condition: 48VDC input.
4.Output voltage will always step down by 3 volts from input DC voltage.
5.The output of LDD-H should not be connected to the input of the same unit or output from other sources.
※ Product Liability Disclaimer : For detailed information, please refer to https://www.meanwell.com/serviceDisclaimer.aspx

LRI Distribuída no Brasil pela LRI | vendas@lri.com.br | 51 2129-3000

■ Mechanical Specification

◎ Blank type(LDD– 300~1000H):

Unit: mm (inch)

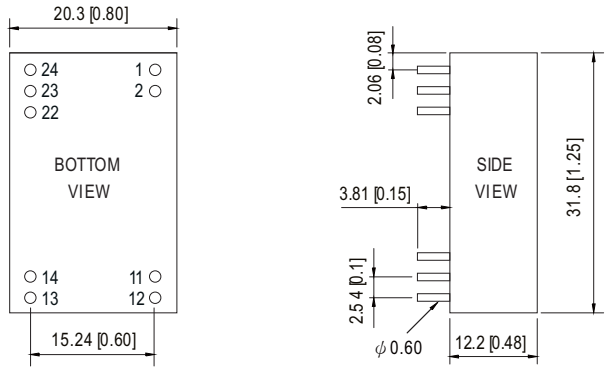

NOTE: Pin tolerance ±0.05mm

◎ Blank type(LDD– 1200~1500H):

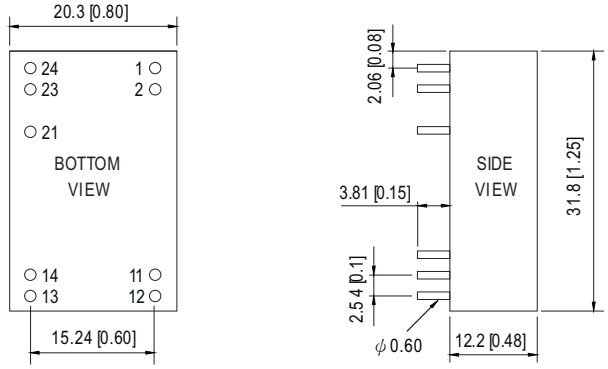

NOTE: Pin tolerance ±0.05mm

◎W type(LDD– 300~1500HW):

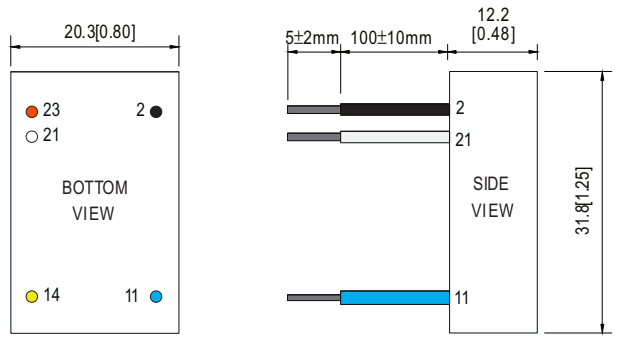

NOTE: All wires UL3385 22AWG

■ Pin Configuration

Pin No.		Comment
1,2	-Vin	Don't connect to -Vout
11,12	-Vout	LED - Connection
13,14	+Vout	LED + Connection
22	PWM DIM	ON/OFF and PWM Dimming (Leave open if not used)
23,24	+Vin	DC Supply
others	N.C	No connection

Pin No.		Comment
1,2	-Vin	Don't connect to -Vout
11,12	-Vout	LED - Connection
13,14	+Vout	LED + Connection
21	PWM DIM	ON/OFF and PWM Dimming (Leave open if not used)
23,24	+Vin	DC Supply
others	N.C	No connection

Pin No.		Comment
2	-Vin (Black)	Don't connect to -Vout
11	-Vout (Blue)	LED - Connection
14	+Vout (Yellow)	LED + Connection
21	PWM DIM (White)	ON/OFF and PWM Dimming (Leave open if not used)
23	+Vin (Red)	DC Supply
others	N.C	No connection

LRI Distribuída no Brasil pela LRI | vendas@lri.com.br | 51 2129-3000

◎S type(LDD – 300~1000HS):

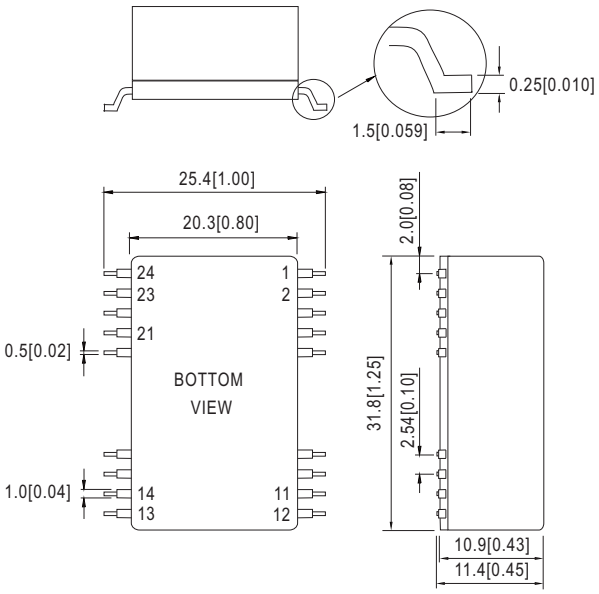

Pin No.		Comment
1,2	-Vin	Don't connect to -Vout
11,12	-Vout	LED - Connection
13,14	+Vout	LED + Connection
21	PWM DIM	ON/OFF and PWM Dimming (Leave open if not used)
23,24	+Vin	DC Supply
others	N.C	No connection

■ Recommended PCB layout (for LDD-300~1000HS)

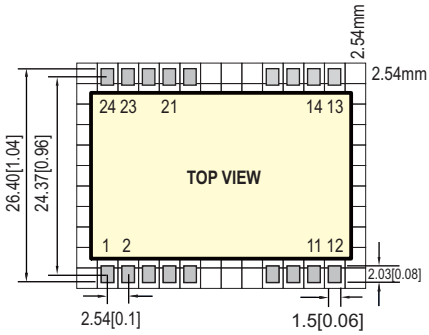

Distribuída no Brasil pela LRI | vendas@lri.com.br | 51 2129-3000

■ Reflow Soldering Curve (for LDD-300~1000HS)

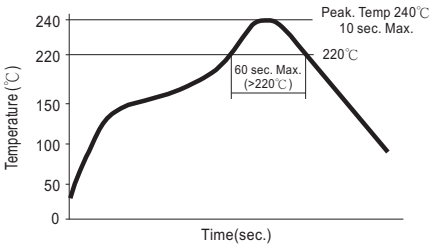

Remark : The curve applies only to the " Hot Air Reflow Soldering"

■ Derating Curve

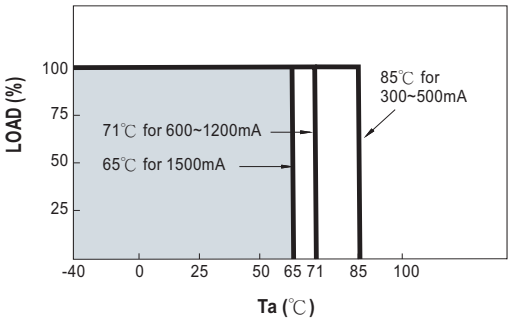

■ PWM Dimming Control

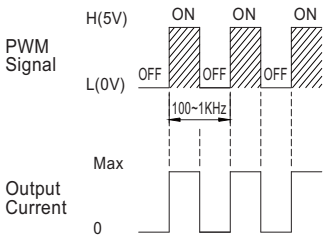

◎ During PWM dimming operation, the output current will change to PWM style.

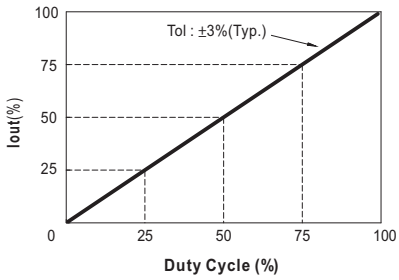

■ Standard Application

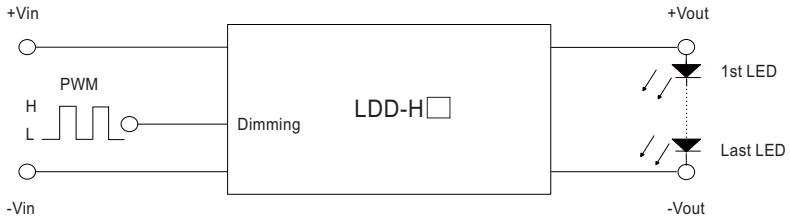

H: >2.5~6VDC or open circuit

L: <0.8VDC or short

■ Efficiency VS Output Voltage(Number of LEDs)

Fig-1 12VDC input, 1~3 LEDs(Vf=3V)

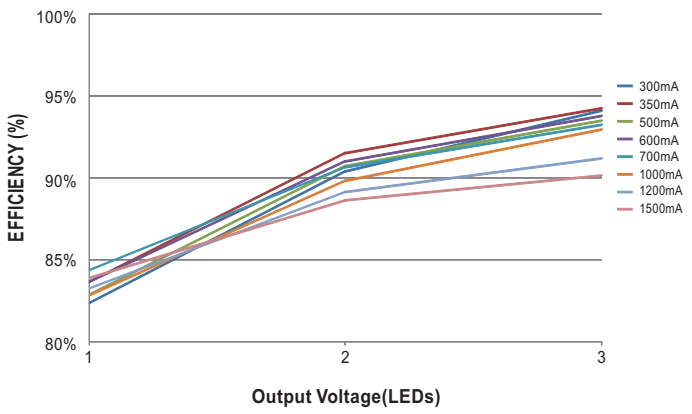

Fig-2 24VDC input, 1~7 LEDs(Vf=3V)

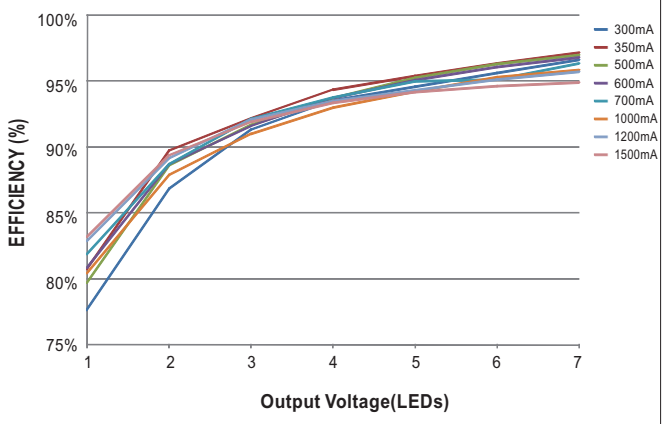

Fig-3 36VDC input, 1~10 LEDs(Vf=3V)

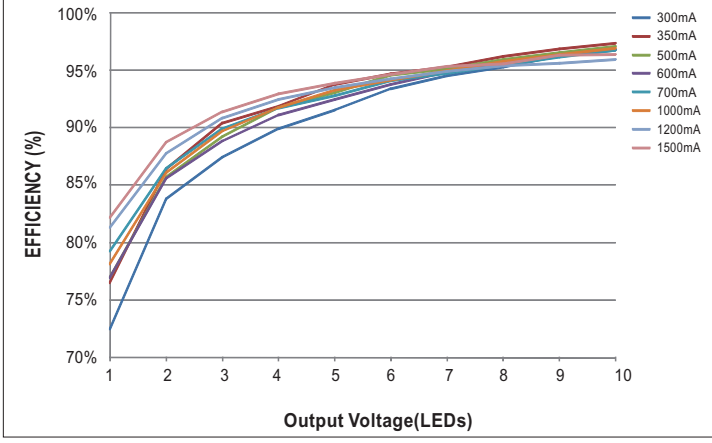

Fig-4 48VDC input, 1~14 LEDs(Vf=3V)

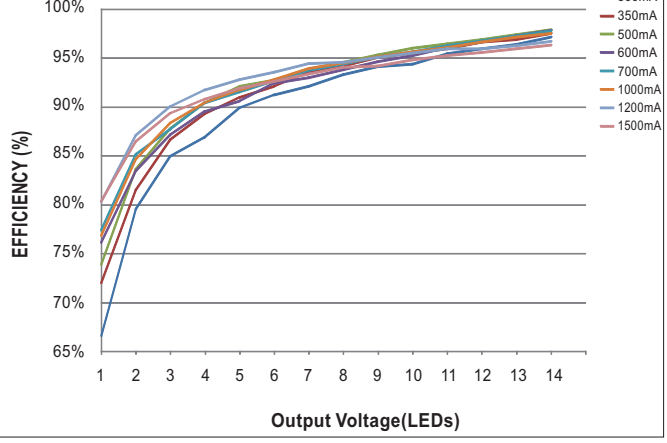

LRI Distribuída no Brasil pela LRI | vendas@lri.com.br | 51 2129-3000

■ Packing

Standard Tube Packing	LDD-H			
	MPQ Per Tube (PCS)	One Tube G.W.	Max. Q'TY/ Carton(PCS)	One Carton G.W.
Unit : mm 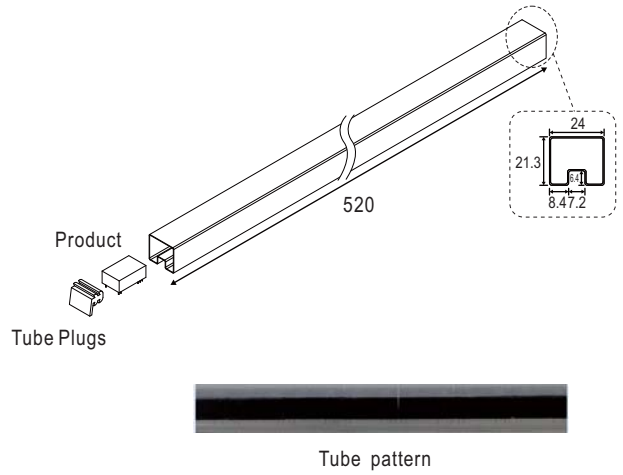 Tube pattern	15	260g	750	13.8Kg

Standard Tube Packing	LDD-HW			
	MPQ (Box)	One Box G.W.	Max. Q'TY/ Carton(PCS)	One Carton G.W.
Unit : mm 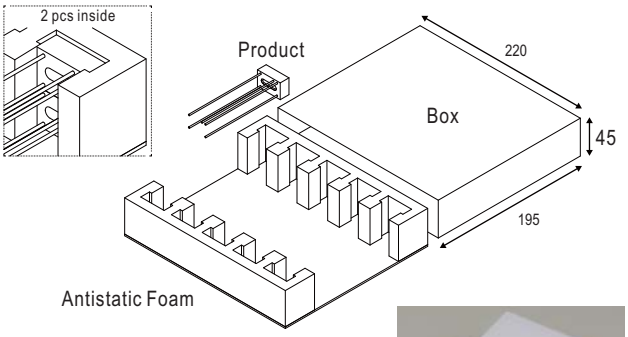 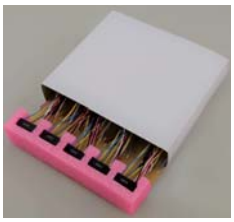	20	440g	240	6.08Kg

LRI Distribuída no Brasil pela LRI | vendas@lri.com.br | 51 2129-3000

Standard Tube Packing	LDD-HS			
	MPQ Per Tube (PCS)	One Tube G.W.	Max. Q'TY/ Carton(PCS)	One Carton G.W.
Unit : mm 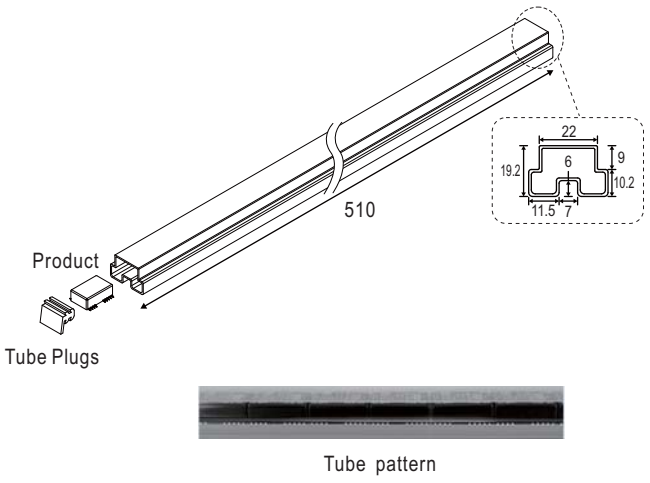 Tube pattern	15	250g	600	10.8Kg

Standard Tube Packing

Unit : mm

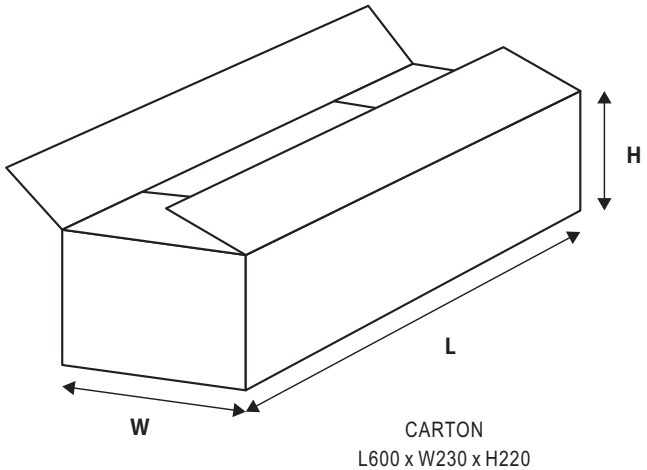

CARTON
L600 x W230 x H220

■ Installation Manual

Please refer to : http://www.meanwell.com/manual.html

Distribuída no Brasil pela LRI | vendas@lri.com.br | 51 2129-3000