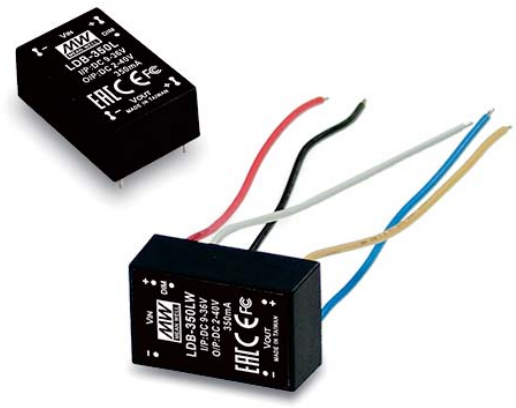

Features :

- DC/DC buck-boost converter
- Constant current output: 300mA to 600mA
- Wide input voltage: 9 ~ 36VDC
- Wide output LED string voltage: 2 ~ 40VDC
- High efficiency up to 91%
- Comply with BS EN/EN55015 and FCC part15
- Built-in PWM and remote ON/OFF control
- Protections: Short circuit / Over temperature
- Cooling by free air convection
- Fully encapsulated with IP67 level
- Compact size
- High reliability
- Suitable for driving illumination LED
- 3 years warranty

GTIN CODE

MW Search: https://www.meanwell.com/serviceGTIN.aspx

LDB-350L□ Blank : pin style
W : wire style

SPECIFICATION

ORDER NO.				LDB-300L□	LDB-350L□	LDB-500L□	LDB-600L□
OUTPUT	CURRENT RANGE			300mA	350mA	500mA	600mA
	VOLTAGE RANGE Note.4			2 ~ 40VDC	2 ~ 40VDC	2 ~ 32VDC	2 ~ 30VDC
	CURRENT ACCURACY (Typ.)			±5%			
	RIPPLE & NOISE(max.) Note.2			150mVp-p	150mVp-p	150mVp-p	200mVp-p
	SWITCHING FREQENCY			1000KHz			
	NO LOAD OUTPUT VOLTAGE			75VDC			
INPUT	VOLTAGE RANGE Note.4			9 ~ 36VDC	9 ~ 36VDC	9 ~ 30VDC	9 ~ 28VDC
	EFFICIENCY (max.)		12VDC	86%	89%	87%	82%
			24VDC	90%	91%	89%	88%
	DC CURRENT	Full load	12VDC	930mA	1100mA	1590mA	2000mA
			24VDC	450mA	520mA	790mA	930mA
		No load		2mA (Vin 24VDC)			
	FILTER			Capacitor			
PWM DIMMING & ON/OFF CONTROL	REMOTE ON/OFF			Leave open if not use			
				Power ON with dimming: DIM ~ -Vin >2 ~ 10VDC or open circuit			
				Power OFF : DIM ~ -Vin < 0.5VDC or short			
	PWM FREQUENCY			100 ~ 1KHz			
	MAX. PWM SIGNAL CURRENT			1mA			
PROTECTION	SHORT CIRCUIT			Regulated at rated output current			
				Protection type: Can be continued, recovers automatically after fault condition is removed			
	OVER TEMPERATURE			Tj 145℃ typically(IC1) detect on main control IC			
				Protection type : Shut down, recovers automatically after temperature goes down			
ENVIRONMENT	WORKING TEMP.			-40 ~ + 70℃ (Refer to derating curve)			
	WORKING HUMIDITY			20% ~ 90% RH non-condensing			
	STORAGE TEMP., HUMIDITY			-55 ~ +125℃, 10 ~ 95% RH			
	TEMP. COEFFICIENT			±0.03% / ℃			
	VIBRATION			10 ~ 500Hz, 2G 10min./1 cycle, period for 60min. each along X, Y, Z axes			
	OPERATING CASE TEMP. (max.)			115℃			
EMC	SAFETY STANDARDS			EAC TP TC 020/2011 approved			
	EMC EMISSION			Compliance to BS EN/EN55015, FCC part 15 class B, EAC TP TC 020			
	EMC IMMUNITY			Compliance to BS EN/EN61000-4-2,3,4,6,8, light industry level, criteria A, EAC TP TC 020			
OTHERS	MTBF			350Khrs min. MIL-HDBK-217F (25℃)			
	DIMENSION			31.8*20.3*12.2mm or 1.25"*0.8"*0.48" inch (L*W*H)			
	WEIGHT			LDB-L:15.6g(15pcs/Tube) ; LDB-LW:18g(20pcs/Box), Please order Base on MPQ			
	POTTING MATERIAL			Expoxy(UL94-V0)			
NOTE	1.All parameters are specified at normal input(24VDC), rated load, 25℃ 70% RH ambient. 2.Ripple & noise are measured at 20MHz by using a 12" twisted pair terminated with a 0.1uf capacitor. 3.The output of LDB-L should not be connected to the input of the same unit or output from other sources. 4. If input voltage is 36V then the output voltage operating range had better <38V.						

LRI Distribuída no Brasil pela LRI | vendas@lri.com.br | 51 2129-3000

Mechanical Specification

Blank type(LDB－_L):

Unit: mm (inch)

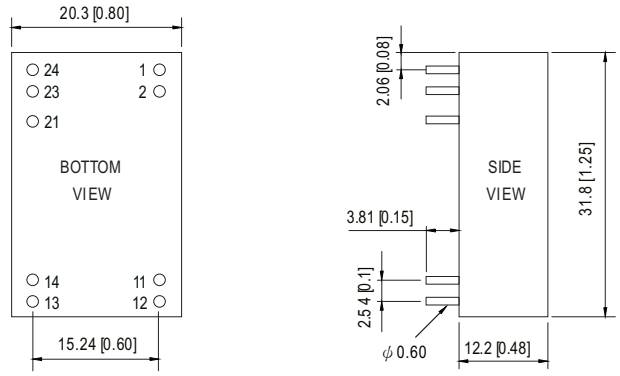

NOTE: Pin tolerance ±0.05mm

W type(LDB－_LW):

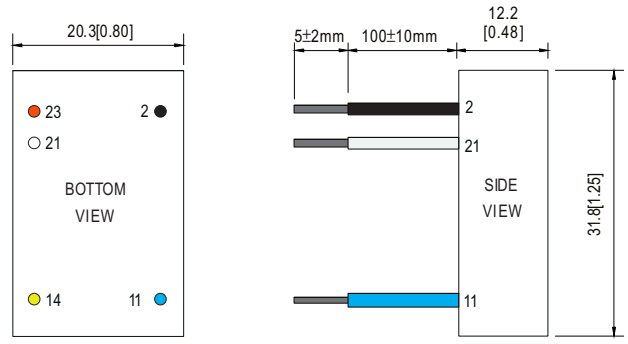

NOTE: All wires UL3385 22AWG

Pin Configuration

Pin No.		Comment
1,2	-Vin	Don't connect to -Vout
11,12	-Vout	LED - Connection
13,14	+Vout	LED + Connection
21	PWM DIM	ON/OFF and PWM Dimming (Leave open if not used)
23,24	+Vin	DC Supply

Pin No.		Comment
2	-Vin (Black)	Don't connect to -Vout
11	-Vout (Blue)	LED - Connection
14	+Vout (Yellow)	LED + Connection
21	PWM DIM (White)	ON/OFF and PWM Dimming (Leave open if not used)
23	+Vin (Red)	DC Supply

Derating Curve

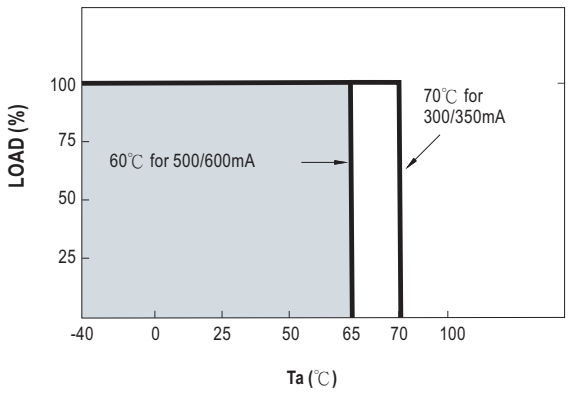

LRI Distribuída no Brasil pela LRI | vendas@lri.com.br | 51 2129-3000

Safe Operating Area

OUTPUT CURRENT 300mA

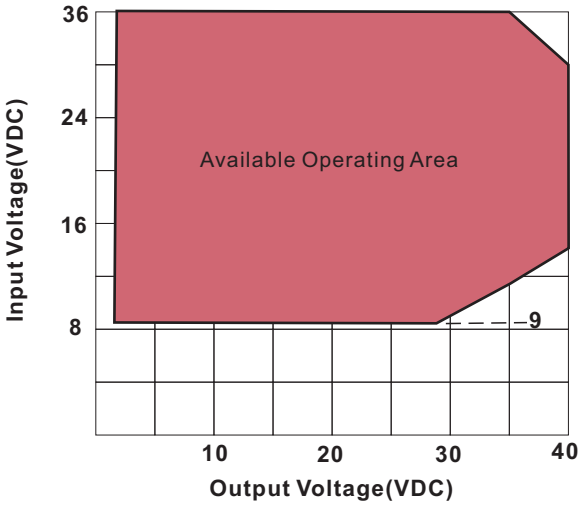

Vin 9V up to Vout=27V
Vin 12V up to Vout=36V

OUTPUT CURRENT 350mA

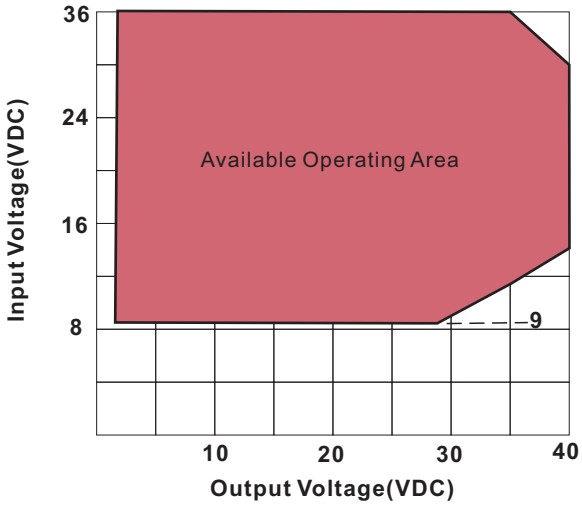

Vin 9V up to Vout=27V
Vin 12V up to Vout=36V

OUTPUT CURRENT 500mA

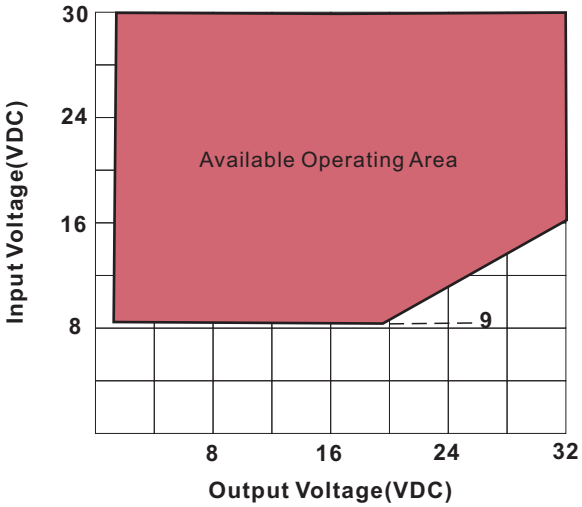

Vin 9V up to Vout=20V
Vin 12V up to Vout=24V
Vin 16V up to Vout=32V

OUTPUT CURRENT 600mA

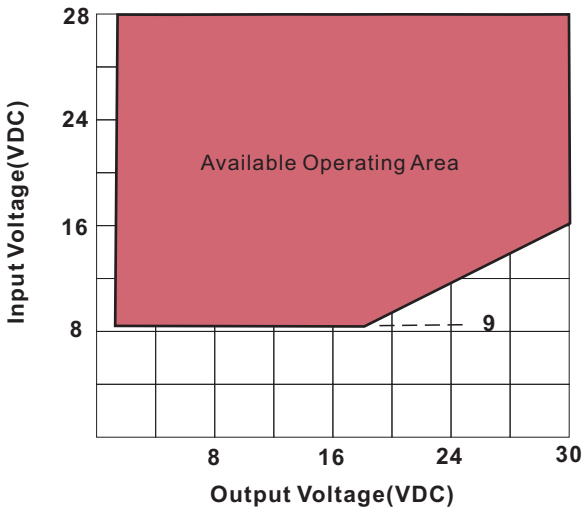

Vin 9V up to Vout=18V
Vin 12V up to Vout=24V
Vin 16V up to Vout=30V

Distribuída no Brasil pela LRI | vendas@lri.com.br | 51 2129-3000

■ PWM Dimming Control

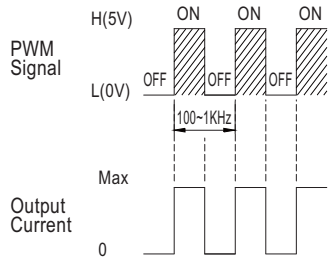

◎ During PWM dimming operation, the output current will change to PWM style.

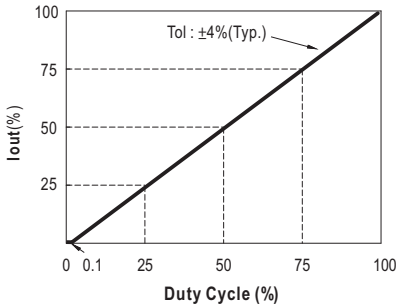

■ Standard Application

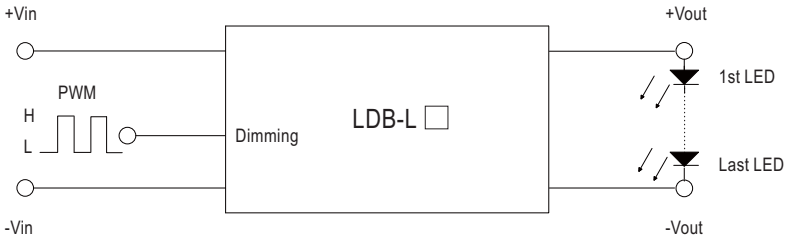

H: >2~10VDC or open circuit

L: <0.5VDC or short

■ Efficiency VS Output Voltage(Number of LEDs)

Fig-1 LDB-300L□

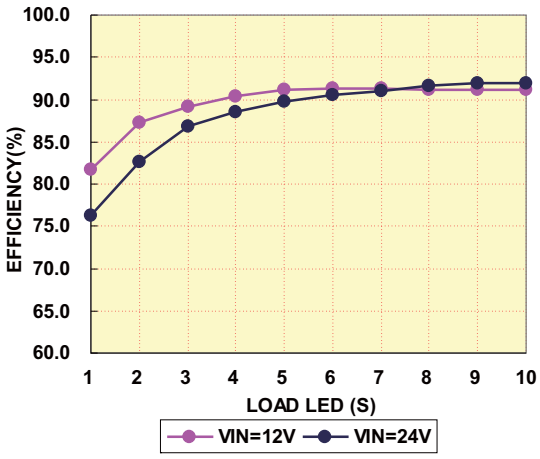

Fig-2 LDB-350L□

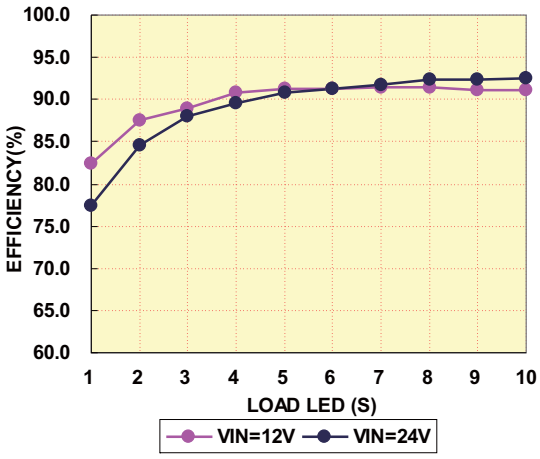

Fig-3 LDB-500L□

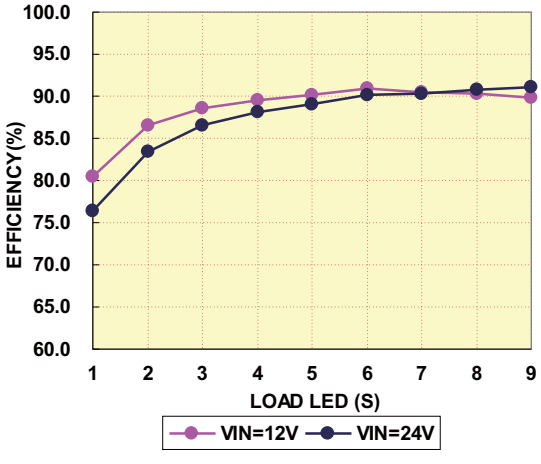

Fig-4 LDB-600L□

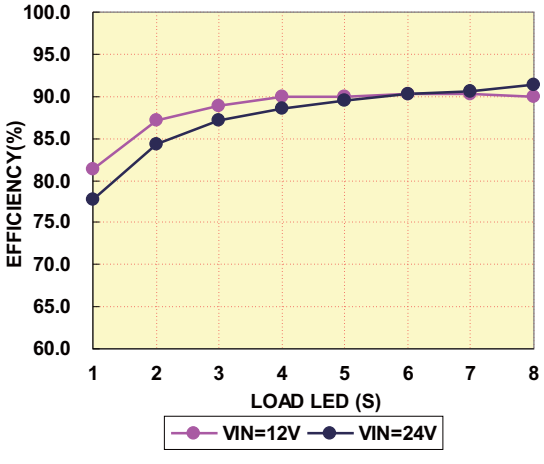

LRI Distribuída no Brasil pela LRI | vendas@lri.com.br | 51 2129-3000

■ Packing

Standard Tube Packing	LDB-L			
	MPQ Per Tube (PCS)	One Tube G.W.	Max. Q'TY/ Carton(PCS)	One Carton G.W.
Unit : mm 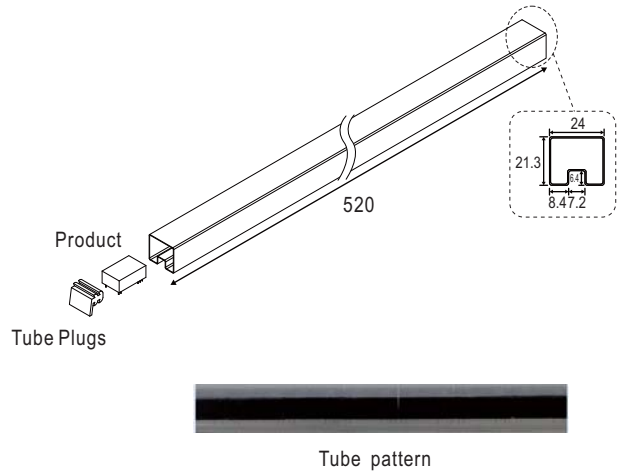 Tube pattern	15	260g	750	13.8Kg

Standard Tube Packing	LDB-LW			
	MPQ (Box)	One Box G.W.	Max. Q'TY/ Carton(PCS)	One Carton G.W.
Unit : mm 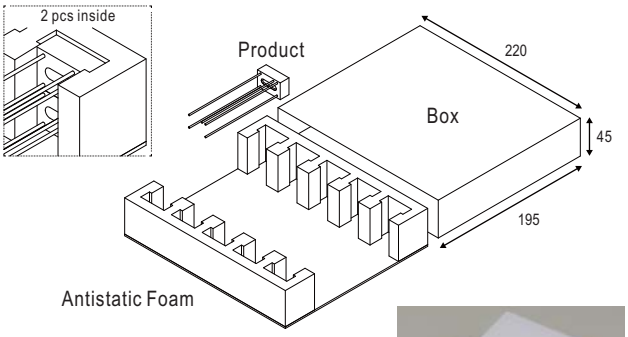 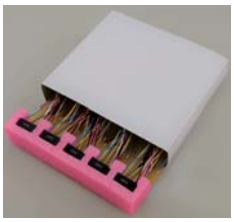	20	440g	240	6.08Kg

LRI Distribuída no Brasil pela LRI | vendas@lri.com.br | 51 2129-3000

Standard Tube Packing

Unit : mm

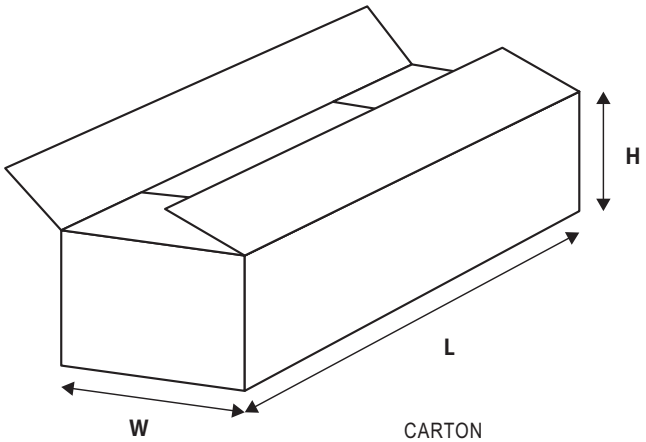

CARTON
L620 x W230 x H230

■ Installation Manual

Please refer to : http://www.meanwell.com/manual.html

Distribuída no Brasil pela LRI | vendas@lri.com.br | 51 2129-3000