Blank Version



UART Version







UL62368-1 TPTC004 AS/NZS62368.1 IEC62368-1 (Note 6)

Security Industrial Network Telecom

Features

- Built-in battery charger and UPS function
- TTL signals for status detection:
  AC OK, Battery disconnect, Battery reverse polarity, Battery low, Battery full and Discharge (Blank version only)
- UART Communication (U version only)
- Built-in buzzer alarm (U version only)
- Built-in AC and battery circuit ON/OFF switchs enhance safetyness during maintenance
- Forced UPS mode for battery maintenance
- Protections: Short circuit / Overload / Over voltage / Over temperature / Battery low voltage / Battery reverse polarity (No damage)
- -20 ~ +60℃ wide operating temperature
- Output voltage adjustable (-20%~+5%) for CH1 by VR
- Suitable for lead acid and lithium-ion batteries
- Design refer to GB17945/GB4717(U version only) system requirement
- 1U low profile (30 mm)
- 3 years warranty

Applications

- Fire emergency and evacuation system
- Public safety battery back-up
- Security system
- Uninterruptible DC-UPS system
- Central monitoring system
- Industrial automation

GTIN CODE

MW Search: https://www.meanwell.com/serviceGTIN.aspx

Description

LAD-360 series is a 360W economical AC/DC low profile security power supply with UPS function. Adopting the input range from 90Vac to 264Vac (115Vac/230Vac selectable by switch) and supports output 27.6V, 41.5V and 55.2Vdc. With high efficiency up to 86.5% and built-in AC, battery switch for easy maintenance. In addition, LAD-360 series not only provide TTL signals for AC OK, battery disconnect, battery reverse polarity (No damage), battery low detection, battery full and discharge, but also possess UART version so the users can monitor and control the status of the units, that enhance easy way for integration into security and fire systems directly.

Model Encoding

LAD - 360 B U

- U: Blank: TTL signal only; U: UART Communication only
- B: Output voltage(B: 27.6V, C: 41.5V, D: 55.2V)
- 360: Rated wattage
- LAD: Series name

LRI Distribuída no Brasil pela LRI | vendas@lri.com.br | 51 2129-3000

SPECIFICATION FOR TTL FUNCTION MODEL (Blank Version)

MODEL		LAD-360B		LAD-360C		LAD-360D	
OUTPUT	OUTPUT NUMBER	CH1	CH2	CH1	CH2	CH1	CH2
	DC VOLTAGE	27.6V	27.6V	41.5V	41.5V	55.2V	55.2V
	RATED CURRENT	11.5A	1.5A(Battery Charger)	7.14A	1.5A(Battery Charger)	5.03A	1.5A(Battery Charger)
	CURRENT RANGE	0 ~ 13A	--------	0 ~ 8.64A	--------	0 ~ 6.53A	--------
	RATED POWER	358.8W		358.56W		360.46W	
	RIPPLE & NOISE (max.) Note.2	150mVp-p	--------	240mVp-p	--------	240mVp-p	--------
	VOLTAGE ADJ. RANGE	CH1: 21.6 ~ 29V		CH1: 32.4 ~ 43.5V		CH1: 43.5 ~ 58V	
	VOLTAGE TOLERANCE Note.3	±1.0%	--------	±1.0%	--------	±0.5%	--------
	LINE REGULATION	±0.5%	--------	±0.5%	--------	±0.5%	--------
	LOAD REGULATION	±0.5%	--------	±0.5%	--------	±0.5%	--------
	SETUP, RISE TIME	2000ms, 50ms/230VAC 2000ms, 50ms/115VAC at full load					
	HOLD UP TIME (Typ.)	16ms/230VAC 12ms/115VAC at full load					
	BATTERY STATIC DISCHARGE CURRENT	<100μA					
INPUT	VOLTAGE RANGE	90 ~ 132VAC / 180 ~ 264VAC by switch 240 ~ 370VDC (Default switch at 230VAC)					
	FREQUENCY RANGE	47 ~ 63Hz					
	EFFICIENCY (Typ.)	86%		86.5%		86.5%	
	AC CURRENT (Typ.)	8A/115VAC 4A/230VAC					
	INRUSH CURRENT (Typ.)	COLD START 60A/115VAC 60A/230VAC					
	LEAKAGE CURRENT	<0.5mA / 240VAC					
PROTECTION	OVERLOAD	CH1:105 ~ 135% CH2:90 ~ 110% Protection type : CH1 OLP, CH2 with battery: The unit will enter to UPS mode when CH1 is around 105%~120%, when total output of CH1 + CH2 reach around 125%~135% output shuts down CH1 OLP, CH2 without battery:Shut down o/p voltage,re-power on to removed CH2 : Constant current limiting; fault condition does not affect CH1 working,recovers automatically after fault condition is removed (External fuse is mandatory in series connection with battery for protection)					
	OVER VOLTAGE	CH1:31 ~ 36V		CH1:47 ~ 55V		CH1:59 ~ 69V	
		Protection type : Shut down o/p voltage, re-power on to removed					
	OVER TEMPERATURE	Protection type : Shut down o/p voltage, re-power on to removed					
	BATTERY REVERSE POLARITY	Protected when reverse polarity , no damage, recovers automatically after fault condition is removed					
	BATTERY CUTOFF	21.5V±0.5V		32V±0.5V		43V±0.5V	
FUNCTION	AC OK	TTL signal, High / Open : AC Fail ; Low : AC OK ; Ice : max. 30mA@ 50VDC					
	BATTERY DISCONNECT/ REVERSE POLARITY	TTL signal, High / Open : Battery connect/normal ; Low : Battery disconnect/reverse polarity; Ice : max. 30mA@ 50VDC					
	BATTERY LOW	TTL signal, High / Open : Battery normal ; Low : Battery low; Ice : max. 30mA@ 50VDC					
	BATTERY FULL	TTL signal, High / Open : Battery charging ; Low : Battery full ; Ice : max. 30mA@ 50VDC					
	DISCHARGE	TTL signal, High / Open : Charge ; Low : Discharge ; Ice : max. 30mA@ 50VDC					
ENVIRONMENT	WORKING TEMP.	-20 ~ +60℃ (Refer to "Derating Curve")					
	WORKING HUMIDITY	20 ~ 95% RH non-condensing					
	STORAGE TEMP., HUMIDITY	-30 ~ +85℃, 10 ~ 95% RH non-condensing					
	TEMP. COEFFICIENT	±0.03%/℃ (0 ~ 50℃)					
	VIBRATION	10 ~ 500Hz, 5G 10min./1cycle, 60min. each along X, Y, Z axes					
SAFETY & EMC (Note 4 & 5)	SAFETY STANDARDS	UL62368-1, BS EN/EN62368-1, AS/NZS62368.1, EAC TP TC 004 approved; Design refer to GB 17945-2010					
	WITHSTAND VOLTAGE	I/P-O/P:3KVAC I/P-FG:2KVAC O/P-FG:0.5KVAC					
	ISOLATION RESISTANCE	I/P-O/P, I/P-FG, O/P-FG:100M Ohms / 500VDC / 25℃/ 70% RH					
	EMC EMISSION	**Parameter**	**Standard**	**Test Level / Note**			
		Conducted	BS EN/EN55032 (CISPR32), EAC TP TC 020	Class A			
		Radiated	BS EN/EN55032 (CISPR32), EAC TP TC 020	Class A			
		Harmonic Current	-----	-----			
		Voltage Flicker	-----	-----			
	EMC IMMUNITY	**Parameter**	**Standard**	**Test Level / Note**			
		ESD	BS EN/EN61000-4-2	Level 3, 8KV air ; Level 2, 6KV contact; criteria A			
		Radiated	BS EN/EN61000-4-3	Level 3, 10V/m ; criteria A			
		EFT / Burst	BS EN/EN61000-4-4	Level 3, 2KV ; criteria A			
		Surge	BS EN/EN61000-4-5	Level 3, 1KV/Line-Line ;2KV/Line-FG ;criteria A			
		Conducted	BS EN/EN61000-4-6	Level 3, 10V ; criteria A			
		Magnetic Field	BS EN/EN61000-4-8	Level 4, 30A/m ; criteria A			
OTHERS	MTBF	1394.9K hrs min. Telcordia SR-332 (Bellcore); 153.3K hrs min. MIL-HDBK-217F (25℃)					
	DIMENSION	215*115*30mm (L*W*H)					
	PACKING	0.75Kg; 15pcs/12.25Kg/0.7CUFT					

NOTE

1. All parameters NOT specially mentioned are measured at 230VAC input, rated load and 25℃ of ambient temperature.
2. Ripple & noise are measured at 20MHz of bandwidth by using a 12" twisted pair-wire terminated with a 0.1 μF & 47 μF parallel capacitor.
3. Tolerance : includes set up tolerance, line regulation and load regulation.
4. The power supply is considered a component which will be installed into a final equipment. All the EMC tests are been executed by mounting the unit on a 360mm*360mm metal plate with 1mm of thickness. Radiation testing requires adding 13*26*30NIZN magnetic loops or buckles to the battery output wire. The final equipment must be re-confirmed that it still meets EMC directives. For guidance on how to perform these EMC tests, please refer to "EMI testing of component power supplies." (as available on https://www.meanwell.com//Upload/PDF/EMI_statement_en.pdf)
5. This power supply does not meet the harmonic current requirements outlined by BS EN/EN61000-3-2. Please do not use this power supply under the following conditions:
   a) the end-devices is used within the European Union, and
   b) the end-devices is connected to public mains supply with 220Vac or greater rated nominal voltage, and
   c) the power supply is: - installed in end-devices with average or continuous input power greater than 75W, or
   - belong to part of a lighting system

   Exception:
   Power supplies used within the following end-devices do not need to fulfill BS EN/EN61000-3-2
   a) professional equipment with a total rated input power greater than 1000W;
   b) symmetrically controlled heating elements with a rated power less than or equal to 200W
6. The ambient temperature derating of 3.5℃/1000m with fanless models and of 5℃/1000m with fan models for operating altitude higher than 2000m(6500ft).

※ Product Liability Disclaimer : For detailed information, please refer to https://www.meanwell.com/serviceDisclaimer.aspx

LRI Distribuída no Brasil pela LRI | vendas@lri.com.br | 51 2129-3000

SPECIFICATION FOR UART COMMUNICATION FUNCTION MODEL (U Version)

MODEL		LAD-360BU		LAD-360CU		LAD-360DU	
OUTPUT	OUTPUT NUMBER	CH1	CH2	CH1	CH2	CH1	CH2
	DC VOLTAGE	27.6V	27.6V	41.5V	41.5V	55.2V	55.2V
	RATED CURRENT	11.5A	1.5A(Battery Charger)	7.14A	1.5A(Battery Charger)	5.03A	1.5A(Battery Charger)
	CURRENT RANGE	0 ~ 13A	--------	0 ~ 8.64A	--------	0 ~ 6.53A	--------
	RATED POWER	358.8W		358.56W		360.46W	
	RIPPLE & NOISE (max.) Note.2	150mVp-p	--------	240mVp-p	--------	240mVp-p	--------
	VOLTAGE ADJ. RANGE	CH1: 21.6 ~ 29V		CH1: 32.4 ~ 43.5V		CH1: 43.5 ~ 58V	
	VOLTAGE TOLERANCE Note.3	±1.0%	--------	±1.0%	--------	±0.5%	--------
	LINE REGULATION	±0.5%	--------	±0.5%	--------	±0.5%	--------
	LOAD REGULATION	±0.5%	--------	±0.5%	--------	±0.5%	--------
	SETUP, RISE TIME	2000ms, 50ms/230VAC 2000ms, 50ms/115VAC at full load					
	HOLD UP TIME (Typ.)	16ms/230VAC 12ms/115VAC at full load					
	BATTERY STATIC DISCHARGE CURRENT	<100μA					
INPUT	VOLTAGE RANGE	90 ~ 132VAC / 180 ~ 264VAC by switch 240 ~ 370VDC (Default switch at 230VAC)					
	FREQUENCY RANGE	47 ~ 63Hz					
	EFFICIENCY (Typ.)	86%		86.5%		86.5%	
	AC CURRENT (Typ.)	8A/115VAC 4A/230VAC					
	INRUSH CURRENT (Typ.)	COLD START 60A/115VAC 60A/230VAC					
	LEAKAGE CURRENT	<0.5mA / 240VAC					
PROTECTION	OVERLOAD	CH1:105 ~ 135% CH2:90 ~ 110%					
		Protection type : CH1 OLP, CH2 with battery: The unit will enter to UPS mode when CH1 is around 105%~120%, when total output of CH1 + CH2 reach around 125%~135% output shuts down CH1 OLP, CH2 without battery:Shut down o/p voltage,re-power on to removed CH2 : Constant current limiting; fault condition does not affect CH1 working,recovers automatically after fault condition is removed (External fuse is mandatory in series connection with battery for protection)					
	OVER VOLTAGE	CH1:31 ~ 36V		CH1:47 ~ 55V		CH1:59 ~ 69V	
		Protection type : Shut down o/p voltage, re-power on to removed					
	OVER TEMPERATURE	Protection type : Shut down o/p voltage, re-power on to removed					
	BATTERY REVERSE POLARITY	Protected when reverse polarity , no damage, recovers automatically after fault condition is removed					
	BATTERY CUTOFF	21.5V±0.5V		32V±0.5V		43V±0.5V	
FUNCTION	AC OK	115VAC Input : Signals AC failure and activates when input voltage <75VAC Recover the main power supply when input voltage >85VAC 230VAC Input : Signals AC failure and activates when input voltage <165VAC Recover the main power supply when input voltage >175VAC					
	CHARGER CIRCUIT FAIL	Battery disconnected, battery reverse polarity , signal failure					
	BUZZER ALARM	Battery low(fire alarm system selectable by UART)					
		AC fail, Battery low, battery disconnected, battery reverse connect, overload status (evacuation system selectable by UART)					
ENVIRONMENT	WORKING TEMP.	-20 ~ +60℃ (Refer to "Derating Curve")					
	WORKING HUMIDITY	20 ~ 95% RH non-condensing					
	STORAGE TEMP., HUMIDITY	-30 ~ +85℃, 10 ~ 95% RH non-condensing					
	TEMP. COEFFICIENT	±0.03%/℃ (0 ~ 50℃)					
	VIBRATION	10 ~ 500Hz, 5G 10min./1cycle, 60min. each along X, Y, Z axes					
SAFETY & EMC (Note 4 & 5)	SAFETY STANDARDS	UL62368-1, BS EN/EN62368-1, AS/NZS62368.1, EAC TP TC 004 approved; Design refer to GB 17945-2010, GB4717					
	WITHSTAND VOLTAGE	I/P-O/P:3KVAC I/P-FG:2KVAC O/P-FG:0.5KVAC					
	ISOLATION RESISTANCE	I/P-O/P, I/P-FG, O/P-FG:100M Ohms / 500VDC / 25℃/ 70% RH					
	EMC EMISSION	**Parameter**	**Standard**	**Test Level / Note**			
		Conducted	BS EN/EN55032 (CISPR32), EAC TP TC 020	Class A			
		Radiated	BS EN/EN55032 (CISPR32), EAC TP TC 020	Class A			
		Harmonic Current	-----	-----			
		Voltage Flicker	-----	-----			
	EMC IMMUNITY	**Parameter**	**Standard**	**Test Level / Note**			
		ESD	BS EN/EN61000-4-2	Level 3, 8KV air ; Level 2, 6KV contact; criteria A			
		Radiated	BS EN/EN61000-4-3	Level 3, 10V/m ; criteria A			
		EFT / Burst	BS EN/EN61000-4-4	Level 3, 2KV ; criteria A			
		Surge	BS EN/EN61000-4-5	Level 3, 1KV/Line-Line ;2KV/Line-FG ;criteria A			
		Conducted	BS EN/EN61000-4-6	Level 3, 10V ; criteria A			
		Magnetic Field	BS EN/EN61000-4-8	Level 4, 30A/m ; criteria A			
OTHERS	MTBF	1160.5K hrs min. Telcordia SR-332 (Bellcore); 126.5K hrs min. MIL-HDBK-217F (25℃)					
	DIMENSION	215*115*30mm (L*W*H)					
	PACKING	0.75Kg; 15pcs/12.25Kg/0.7CUFT					

NOTE

1. All parameters NOT specially mentioned are measured at 230VAC input, rated load and 25℃ of ambient temperature.
2. Ripple & noise are measured at 20MHz of bandwidth by using a 12" twisted pair-wire terminated with a 0.1 μF & 47 μF parallel capacitor.
3. Tolerance : includes set up tolerance, line regulation and load regulation.
4. The power supply is considered a component which will be installed into a final equipment. All the EMC tests are been executed by mounting the unit on a 360mm*360mm metal plate with 1mm of thickness. Radiation testing requires adding 13*26*30NIZN magnetic loops or buckles to the battery output wire. The final equipment must be re-confirmed that it still meets EMC directives. For guidance on how to perform these EMC tests, please refer to "EMI testing of component power supplies." (as available on https://www.meanwell.com//Upload/PDF/EMI_statement_en.pdf)
5. This power supply does not meet the harmonic current requirements outlined by BS EN/EN61000-3-2. Please do not use this power supply under the following conditions:
   a) the end-devices is used within the European Union, and
   b) the end-devices is connected to public mains supply with 220Vac or greater rated nominal voltage, and
   c) the power supply is: - installed in end-devices with average or continuous input power greater than 75W, or
   - belong to part of a lighting system

   Exception:
   Power supplies used within the following end-devices do not need to fulfill BS EN/EN61000-3-2
   a) professional equipment with a total rated input power greater than 1000W;
   b) symmetrically controlled heating elements with a rated power less than or equal to 200W
6. The ambient temperature derating of 3.5℃/1000m with fanless models and of 5℃/1000m with fan models for operating altitude higher than 2000m(6500ft).

※ Product Liability Disclaimer : For detailed information, please refer to https://www.meanwell.com/serviceDisclaimer.aspx

LRI Distribuída no Brasil pela LRI | vendas@lri.com.br | 51 2129-3000

■ Block Diagram

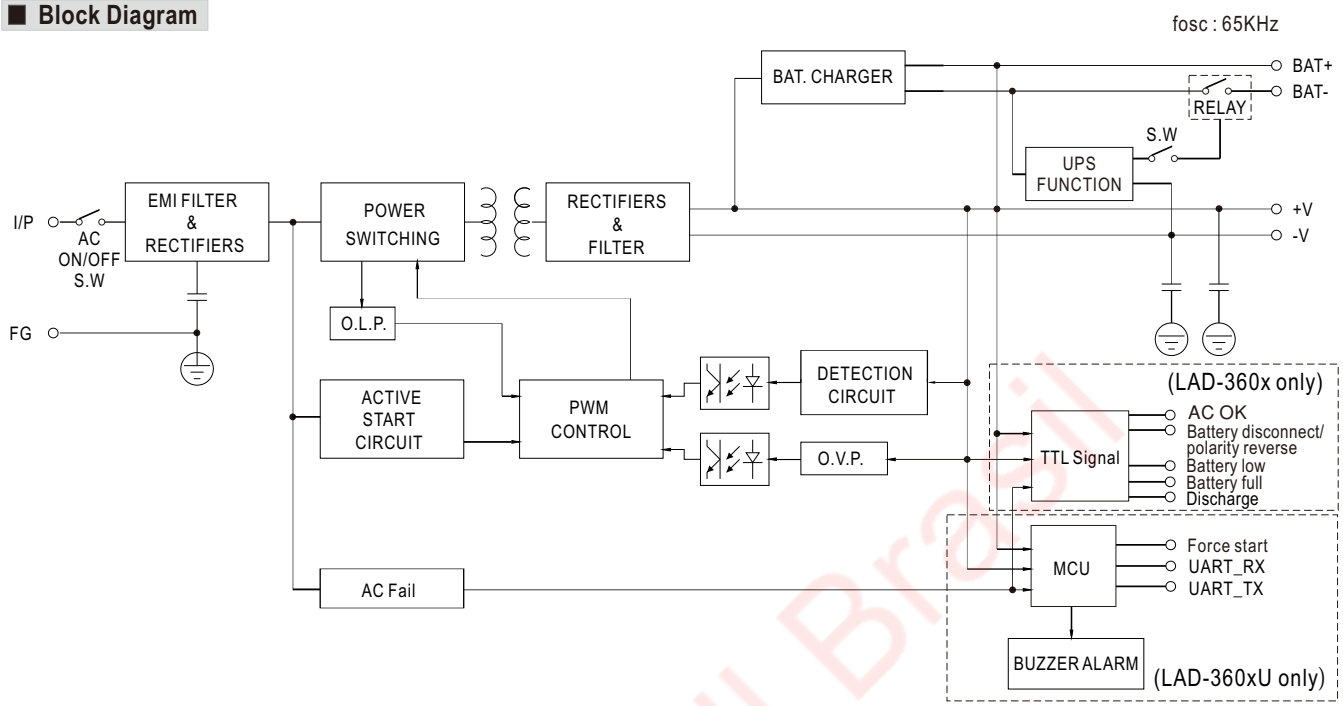

■ Derating Curve

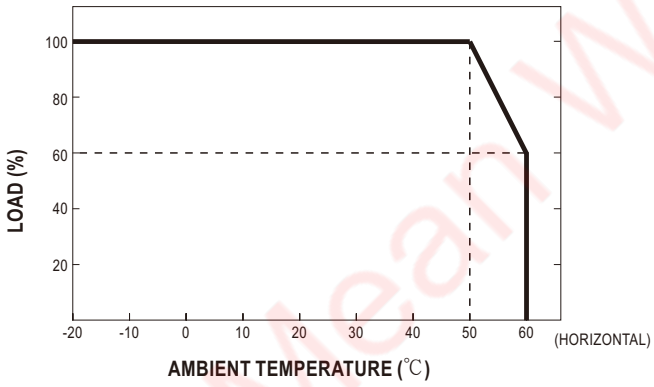

■ Static Characteristics

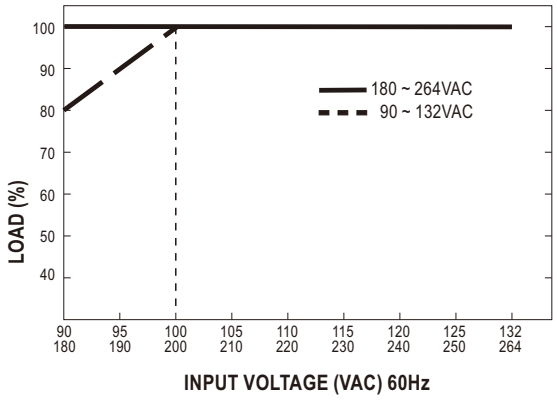

Mean Well Brasil

Distribuída no Brasil pela LRI | vendas@lri.com.br | 51 2129-3000

■ Suggested Application

1.DC-UPS function

When AC voltage drops below 75/165VAC,The UPS function will activate and power source switch battery backup.

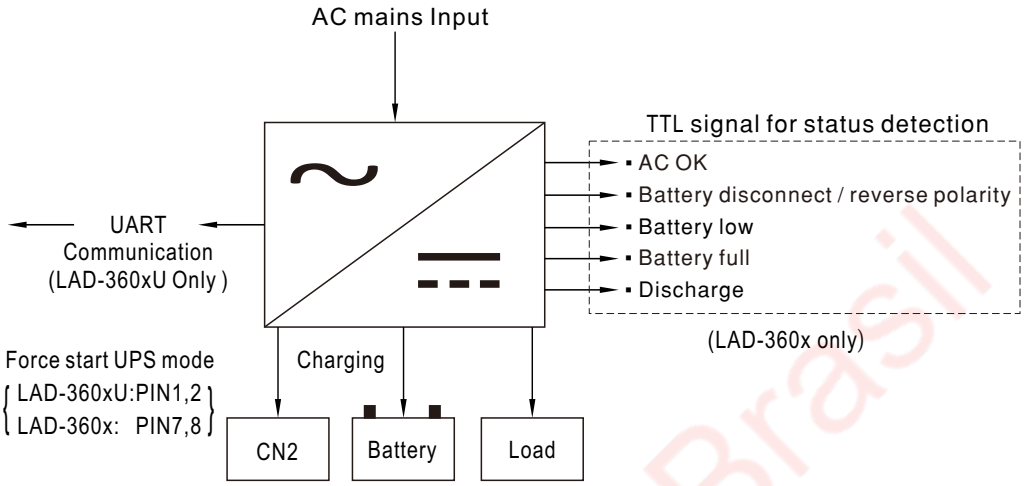

2.UART Communication Function (U version only)

The power supply uploads various fault signals, power supply working status, single battery voltage, main voltage, output voltage and output current to the controller through the UART, and changes the power supply working status according to the controller instructions. For details,please refer to the user manual.

2.1 Forced Start & Remote UPS Control(U version only)

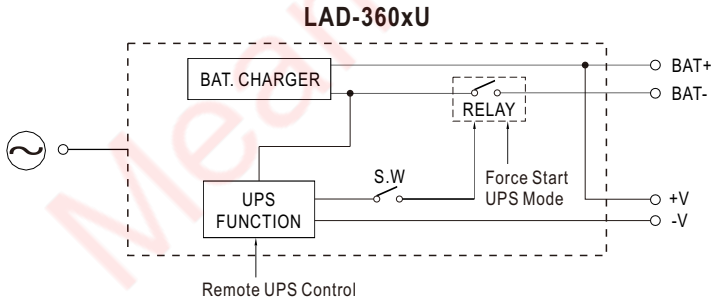

※ Force start UPS mode:

According to fire safety regulation, UPS power supply must equip with force start UPS function. In case of emergency, maintenance or testing, personal can active the UPS mode of by shorting PIN1 and PIN2 of LAD-360xU to ensure the energy supply to the loads. When operating under UPS mode, the BAT. UVP alarm is still active, but the BAT. UVP protection will be disable, therefore, the battery will be fully discharged until system shuts down.

Pin 1 & 2	Status
Short	Forced start
Open	Normal

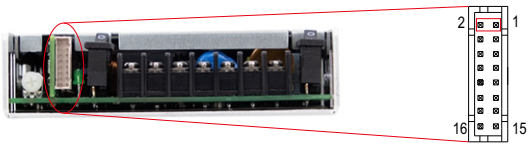

Note:

1st priority of UPS mode: Force start UPS function by internal relay.

Distribuída no Brasil pela LRI | vendas@lri.com.br | 51 2129-3000

※ Remote UPS mode:

According to fire safety regulation, UPS power supply must equip with remote UPS function. So the power supply unit can be linked to the fire alarm system, user's system will be able to detect the status of PIN3 and PIN4 LAD-360xU with UART communication. When PIN 3 and PIN 4 is shorted, the power supply will enter remote UPS mode, therefore the UPS mode will be active and the status signal will also send to the fire alarm system for indication. Personal or the system can use the signal as trigger threshold for other alarm systems to decide when and how to enter the emergency sequence. Under this condition, BAT. UVP alarm and protection are still active.

Pin 3 & 4	Status
Short	Remote UPS control
Open	Normal

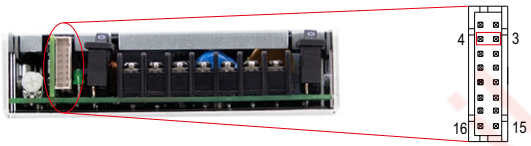

Note:

2nd priority of UPS mode: UPS function can be activate by controlling with this signal, since the controller is still normal, the relay can be controlled through communication protocol.

2.2 Charging Curve for Different Battery(U version only)

Pin 5 & 6	Battery Type
Short	Li-ion batteries
Open	Lead-acid (Pb) batteries

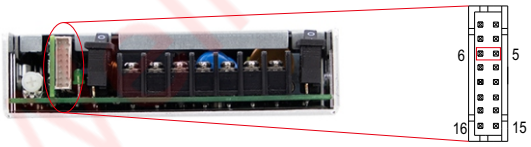

◎ Charging curve

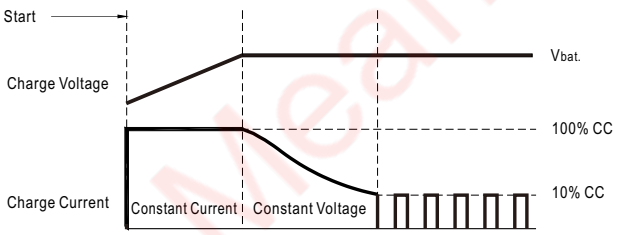

◎ Apply to Lead-acid batteries

◎ Charging curve

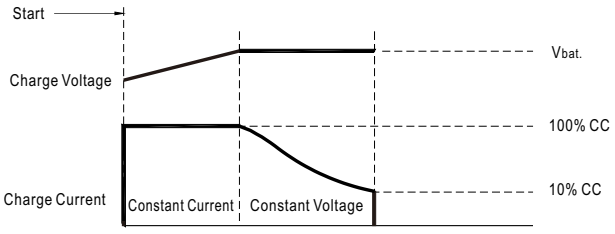

◎ Apply to Li-ion batteries

2.3 Mode Selection for Buzzer(U version only)

Pin 7 & 8	Status
Short	Fire alarm system
Open	Evacuation system

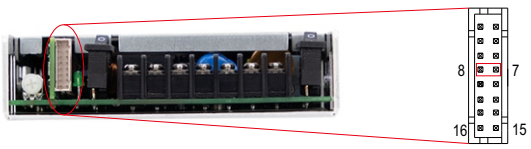

Note:

LAD-360BU Open circuit for fire alarm,Short circuit for evacuation ; LAD-360CU/DU Open circuit for evacuation,Short circuit for fire alarm.

Mean Well Brasil

LRI Distribuída no Brasil pela LRI | vendas@lri.com.br | 51 2129-3000

2.4 Battery Inspection

※ LAD-360BU

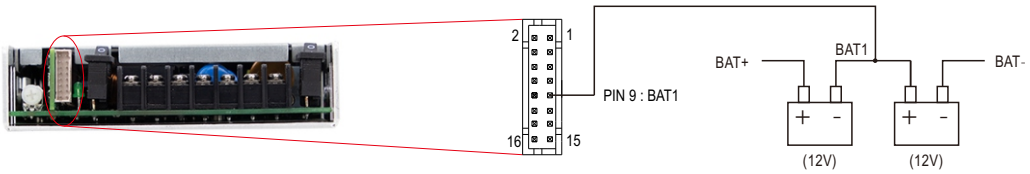

※ LAD-360CU

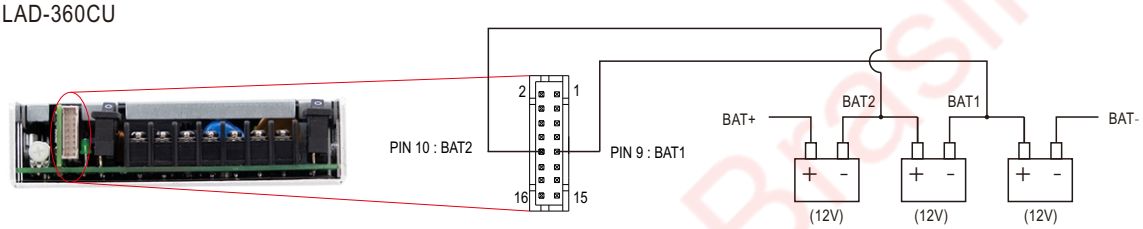

※ LAD-360DU

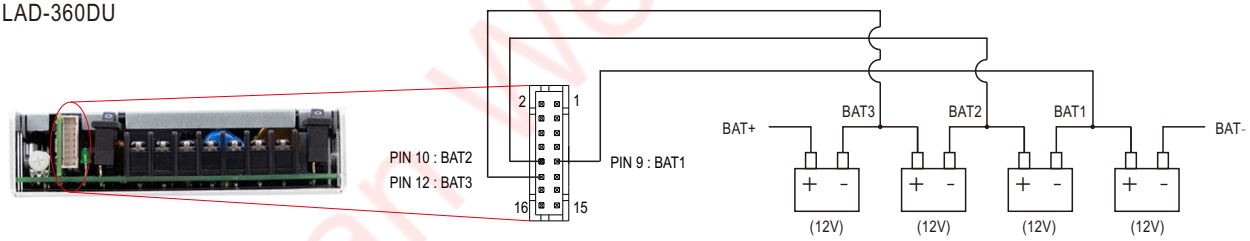

2.5 UART Communication Interface(U version only)

Communication provides functions such as control, setting, and monitoring.
The parameters include the backup power switch, battery undervoltage point ,etc.

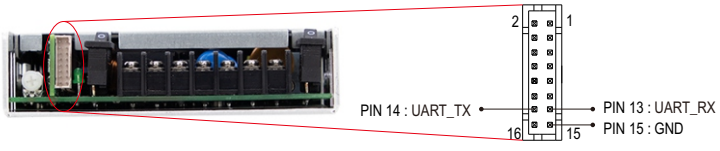

Mean Well Brasil

LRI Distribuída no Brasil pela LRI | vendas@lri.com.br | 51 2129-3000

3.Function signals by TTL and UART

- TTL Signal is sent out through pins from CN2.
- External voltage source is required for the TTL signal. The maximum voltage is 50VDC and the maximum sink current is 30mA.

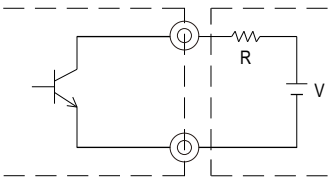

External voltage and resistor
(The max. sink current is 30mA at 50VDC)

3.1 AC OK : Detection of AC status

- TTL Signal for Blank version

Between pin 1 and pin 4	Description
Low (0.3V max. at 30mA)	The signal is "Low" when the AC input is normal
High or open (External applied voltage 50V max.)	The signal turns to be "High" when the AC input is abnormal

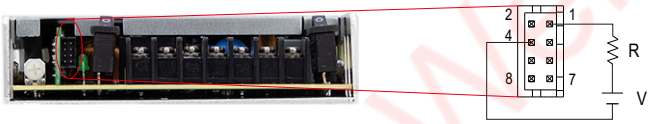

- Signal for UART Version

  AC OK is achievable through UART communication protocol,please refer to for more detail: http://www.meanwell.com/manual.html

3.2 Battery Disconnected/Reverse Polarity: Battery status detection

- TTL Signal for Blank version

Between pin 2 and pin 4	Description
Low (0.3V max. at 30mA)	The signal is "Low" when the battery is not connected or inversely connected
High or open (External applied voltage 50V max.)	The signal turns to be "High" when the battery is connected or normal



Note. The signals of battery disconnected and reverse polarity can only be detected during the first power transmission , it is can not be detected at any time.

- Signal for UART Version

  Battery Disconnected/Reverse Polarity is achievable through UART communication protocol,please refer to for more detail: http://www.meanwell.com/manual.html

Mean Well Brasil

LRI Distribuída no Brasil pela LRI | vendas@lri.com.br | 51 2129-3000

3.3 Battery Low: Battery low detection

- TTL Signal for Blank version

Between pin 3 and pin 4	Description
Low (0.3V max. at 30mA)	The signal is "Low" when the battery is under voltage protected
High or open (External applied voltage 50V max.)	The signal turns to be "High" when the battery is normal

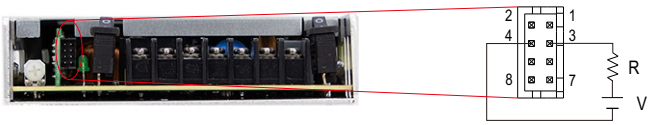

- Signal for UART Version

  Battery Low is achievable through UART communication protocol,please refer to for more detail:

  http://www.meanwell.com/manual.html

3.4 Battery Full：Battery full detection

- TTL Signal for Blank version

Between pin 4 and pin 5	Description
Low (0.3V max. at 30mA)	The signal is "Low" when the battery is fully charged
High or open (External applied voltage 50V max.)	The signal turns to be "High" when the battery is charged

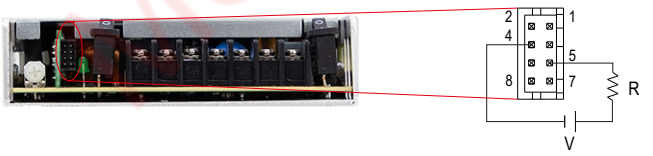

- Signal for UART Version

  Battery Full is achievable through UART communication protocol,please refer to for more detail:

  http://www.meanwell.com/manual.html

Mean Well Brasil

LRI Distribuída no Brasil pela LRI | vendas@lri.com.br | 51 2129-3000

3.5 Discharge: Discharge detection

- TTL Signal for Blank version

Between pin 4 and pin 6	Description
Low (0.3V max. at 30mA)	The signal is "Low" when the power supply is discharging
High or open (External applied voltage 50V max.)	The signal is "High" when the main power is working

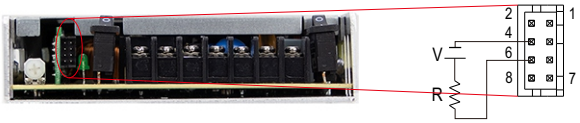

- Signal for UART Version

  Discharge is achievable through UART communication protocol,please refer to for more detail:
  http://www.meanwell.com/manual.html

3.6 Forced Start: Forced start UPS mode

- TTL Signal for Blank version

Pin 7 & 8	Status
Short	Forced start UPS mode
Open	Normal

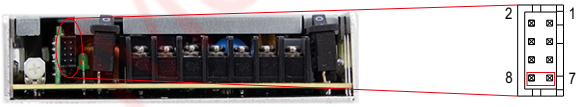

- Signal for UART Version

  Forced Start is achievable through UART communication protocol,please refer to for more detail:
  http://www.meanwell.com/manual.html

Mean Well Brasil

Distribuída no Brasil pela LRI | vendas@lri.com.br | 51 2129-3000

■ Mechanical Specification

Case No. Unit:mm

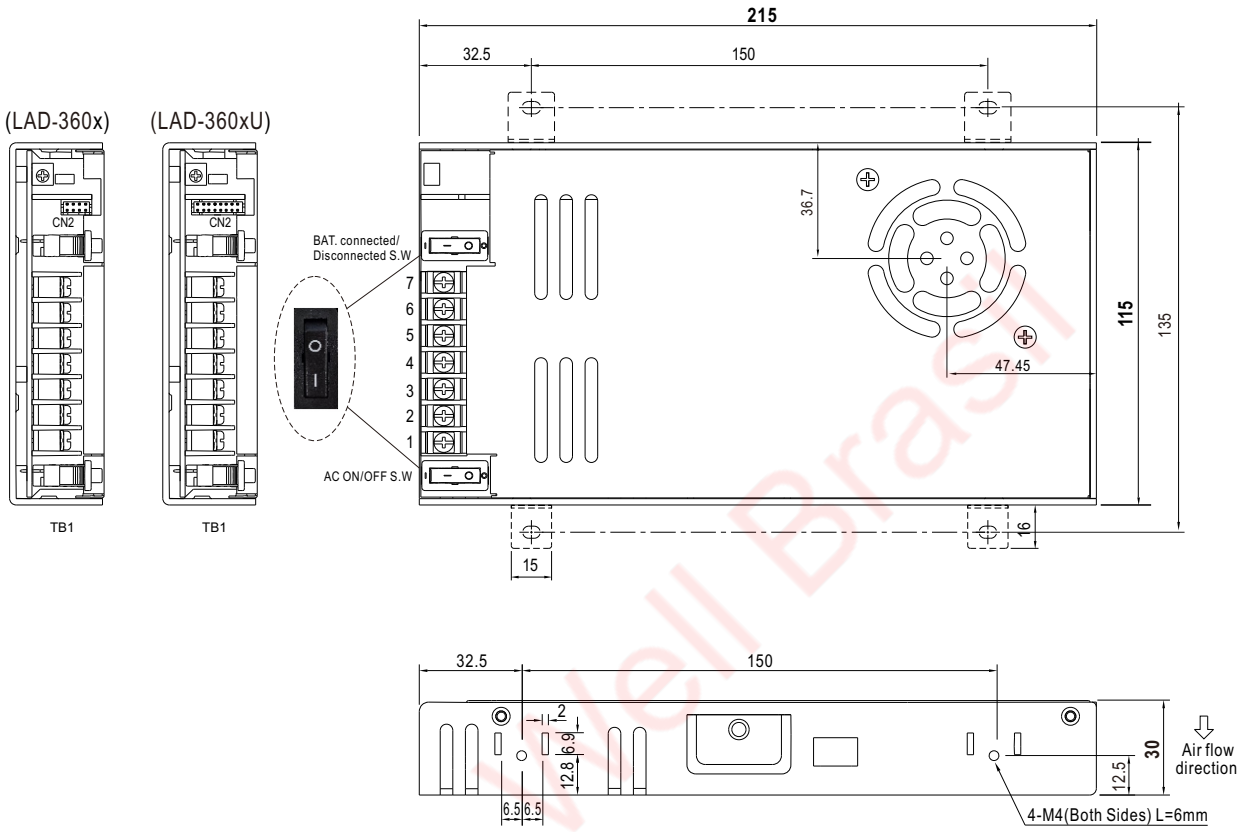

※ Connector Pin No. Assignment(CN2) (LAD-360x)

Pin No.	Assignment(TTL Signal)	Mating Housing	Terminal
1	AC OK	TKP DH2 or equivalent	TKP DHT-1S(LF) or equivalent
2	Battery disconnect/ reverse polarity		
3	Battery low		
4	GND		
5	Battery full		
6	Discharge		
7,8	Open : normal Short : forced start UPS mode		

※ Terminal Pin No. Assignment(TB1)

Pin No.	Assignment
1	AC/L
2	AC/N
3	FG ⏚
4	DC OUTPUT -V
5	DC OUTPUT +V
6	BAT -
7	BAT +

⚠ DC OUTPUT -V and BAT - can not be shorted.

※ Connector Pin No. Assignment(CN2) (LAD-360xU)

Pin No.	Assignment	Mating Housing	Terminal
1,2	Short : forced start Open : normal	TKP DH2 or equivalent	TKP DHT-1S(LF) or equivalent
3,4	Short : Remote UPS control Open : normal		
5,6	Short : Li- ion batteries Open : Lead-acid (Pb) batteries		
7,8	Fire alarm/ evacuatione option		
9	BAT1		
10	BAT2		
11	NC		
12	BAT3		
13	UART_RX		
14	UART_TX		
15	GND		
16	3.3V		

+3.3V(ref) for testing use only;can't supply power over 1mA for a long time

Mean Well Brasil

LRI Distribuída no Brasil pela LRI | vendas@lri.com.br | 51 2129-3000

■ Accessory List

※ Bracket (Optional accessory, Should ordered seperately)

MW's Order No.	Item	Quantity
DGG2MHS012		4pcs/per model

■ Installation Diagram

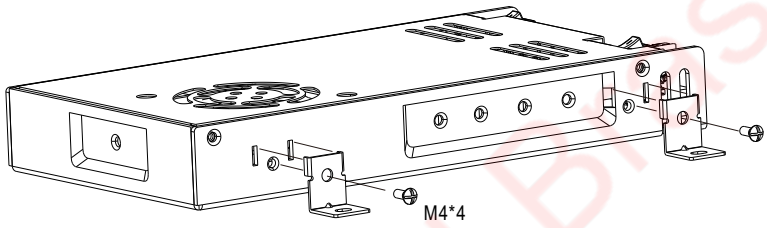



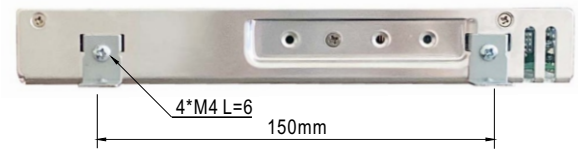



■ Installation Manual

Please refer to : http://www.meanwell.com/manual.html

Distribuída no Brasil pela LRI | vendas@lri.com.br | 51 2129-3000