90W AC-DC PCB-Mount Green Power Module IRM-90 series

User's Manual



(IRM-90)



(IRM-90-xxST)

UL62368-1 IEC62368-1 BS EN/EN60335-1 BS EN/EN62368-1 TPTC004

ECO Automate Industrial Security Network Telecom

Features

- 3.43"x2.05"compact size
- PCB,chassis or screw terminal mounting version
- Universal input 80~305VAC
- No load power consumption<0.3W
- EMI BS EN/EN55032 ClassB without additional components
- Wide operating temp. rage -30~80℃
- Protections: Short circuit / Overload / Over voltage
- Cooling by free air convection
- Isolation Class Ⅱ
- Over voltage category Ⅲ
- Operating attitude up to 4000 meters (Note.7)
- 100W peak(10 sec.)
- 3 years warranty

Applications

- Industrial electrical equipment
- Mechanical equipment
- Factory automation equipment
- Handheld electronic device

GTIN CODE

MW Search: https://www.meanwell.com/serviceGTIN.aspx

Description

IRM-90 is a 90W miniature (87*52*29.5mm) AC-DC PCB-mount module type power supply, ready to be soldered onto the PCB boards of various kinds of electronic instruments or industrial automation equipments. This product allows the universal input voltage range of 80~305VAC. The 94V-0 flame retardant plastic case and potted with silicone enhance the heat dissipation and meet the anti-vibration demand up to 2~5G anti-vibration by model; moreover, it provides the fundamental resistance to dust and moisture.

With the high efficiency up to 93% and the extremely low no-load power consumption below 0.3W, IRM-90 series fulfills the worldwide regulation for the low power consumption requirement for electronics. The entire series is a Class Ⅱ design (no FG pin), incorporating the built-in EMI filtering components, enabling the compliance with BS EN/EN55032 Class B; the supreme EMC features keep the end electronic units from from electromagnetic interference. In addition to the PCB mounting style model, IRM-90 series also offers the screw terminal style model (ST).

Model Encoding

IRM - 90 - 12 ST

- Blank : PCB mounting style
- ST : Screw terminal style

- 12: Output voltage
- 90: Rated wattage
- IRM: Series name

Distribuída no Brasil pela LRI | vendas@lri.com.br | 51 2129-3000

90W AC-DC PCB-Mount Green Power Module IRM-90 series

SPECIFICATION

MODEL			IRM-90-12 ☐	IRM-90-15 ☐	IRM-90-24 ☐	IRM-90-48 ☐
OUTPUT	DC VOLTAGE		12V	15V	24V	48V
	CURRENT	Peak(10 sec.)	7.37A	6.23A	4.13A	2.07A
		Convection	6.7A	5.67A	3.75A	1.88A
	RATED POWER	Peak(10 sec.)Note.2	88.4W	93.5W	99W	99.2W
		Convection	80.4W	85.05W	90W	90.2W
	RIPPLE & NOISE (max.) Note.3		120mVp-p	150mVp-p	200mVp-p	240mVp-p
	VOLTAGE TOLERANCE Note.4		±2.0%	±2.0%	±2.0%	±2.0%
	LINE REGULATION		±0.5%	±0.5%	±0.5%	±0.5%
	LOAD REGULATION		±1.0%	±0.5%	±0.5%	±0.5%
	SETUP, RISE TIME		1000ms, 30ms/230VAC 1000ms, 30ms/115VAC at full load			
	HOLD UP TIME (Typ.)		30ms/230VAC 10ms/115VAC at full load			
INPUT	VOLTAGE RANGE Note.5		80 ~ 305VAC 113 ~ 431VDC			
	FREQUENCY RANGE		47 ~ 63Hz			
	EFFICIENCY (Typ.)		92%	92.5%	93%	93%
	AC CURRENT (Typ.)		1.9A/115VAC 1.1A/230VAC			
	INRUSH CURRENT (Typ.)		COLD START 30A/115VAC 65A/230VAC			
	LEAKAGE CURRENT (max.) Note.6		< 0.25mA/240VAC			
PROTECTION	OVERLOAD		115% ~ 160% rated output power			
			Protection type : Hiccup mode, recovers automatically after fault condition is removed			
	OVER VOLTAGE		12.6 ~ 16.2V	15.8 ~ 20.3V	25.2 ~ 32.4V	50.4 ~ 64.8V
			Protection type : Shut down o/p voltage, re-power on to recover			
	OVER TEMPERATURE		Protection type : Shut down o/p voltage, re-power on to recover			
ENVIRONMENT	WORKING TEMP.		-30 ~ +80℃ (Refer to "Derating Curve")			
	WORKING HUMIDITY		20 ~ 90% RH non-condensing			
	STORAGE TEMP.		-40 ~ +85℃			
	TEMP. COEFFICIENT		±0.03%/℃ (0 ~ 50℃)			
	SOLDERING TEMPERATURE		Wave soldering: 265℃,5s (max.); Manual soldering: 390℃,3s (max.)			
	VIBRATION		Blank:10 ~ 500Hz, 2G 10min./1cycle, period for 60min. each along X, Y, Z axes			
			ST:10 ~ 500Hz, 5G 10min./1cycle, period for 60min. each along X, Y, Z axes			
	OPERATING ALTITUDE Note.7		Ⅲ; EN62368-1;altitude up to 2000 meters			
SAFETY & EMC (Note 8)	SAFETY STANDARDS		IEC62368-1, IEC60335-1, Dekra BS EN/EN60335-1,BS EN/EN62368-1,UL62368-1, TUV BS EN/EN62368-1, EAC TP TC 004 approved			
	WITHSTAND VOLTAGE		I/P-O/P:4KVAC			
	ISOLATION RESISTANCE		I/P-O/P:100M Ohms / 500VDC / 25℃/ 70% RH			
	EMC EMISSION		**Parameter**	**Standard**	**Test Level / Note**	
			Conducted	BS EN/EN55032 (CISPR32),BS EN/EN55014-1	Class B	
			Radiated	BS EN/EN55032 (CISPR32),BS EN/EN55014-1	Class B	
			Harmonic Current	BS EN/EN61000-3-2	Class A	
			Voltage Flicker	BS EN/EN61000-3-3	-----	
	EMC IMMUNITY		BS EN/EN55035, BS EN/EN61000-6-2,BS EN/EN55014-2			
			Parameter	**Standard**	**Test Level / Note**	
			ESD	BS EN/EN61000-4-2	Level 3, 8KV air; Level 2, 4KV contact, criteria A	
			RF field susceptibility	BS EN/EN61000-4-3	Level 3, criteria A	
			EFT bursts	BS EN/EN61000-4-4	Level 3, criteria A	
			Surge susceptibility	BS EN/EN61000-4-5	Level 4,2KV/L-N, criteria A	
			Conducted susceptibility	BS EN/EN61000-4-6	Level 3, criteria A	
			Magnetic field immunity	BS EN/EN61000-4-8	Level 4, criteria A	
			Voltage dip, interruption	BS EN/EN61000-4-11	>95% dip 0. 5 periods, 30% dip 25 periods, >95% interruptions 250 periods	
OTHERS	MTBF		5088.4K hrs min. Telcordia SR-332 (Bellcore) ; 609.9K hrs min. MIL-HDBK-217F (25℃)			
	DIMENSION		PCB mounting style : 87*52*29.5mm (L*W*H) Screw terminal style : 109*52*33.5mm (L*W*H)			
	PACKING		PCB mounting style : 0.197Kg;60pcs/11.8Kg/0.94CUFT Screw terminal style :0.219Kg;50pcs/12Kg/0.56CUFT			

NOTE

1. All parameters NOT specially mentioned are measured at 230VAC input, rated load and 25℃ of ambient temperature.
2. 33% Duty cycle maximum within every 30 seconds. Average output power should not exceed the rated power.
3. Ripple & noise are measured at 20MHz of bandwidth by using a 12" twisted pair-wire terminated with a 0.1 μF & 47 μF parallel capacitor.
4. Tolerance : includes set up tolerance, line regulation and load regulation.
5. Derating may be needed under low input voltages. Please check the derating curve for more details.
6. Leakage current was measured from primary input to DC output.
7. The ambient temperature derating of 3.5℃/1000m with fanless models and of 5℃/1000m with fan models for operating altitude higher than 2000m(6500ft).
8. The power supply is considered a component which will be installed into a final equipment. The final equipment must be re-confirmed that it still meets EMC directives. For guidance on how to perform these EMC tests, please refer to “EMI testing of component power supplies.” (as available on https://www.meanwell.com//Upload/PDF/EMI_statement_en.pdf)

※ Product Liability Disclaimer : For detailed information, please refer to https://www.meanwell.com/serviceDisclaimer.aspx

Distribuída no Brasil pela LRI | vendas@lri.com.br | 51 2129-3000

■ Block Diagram

fosc : 70KHz

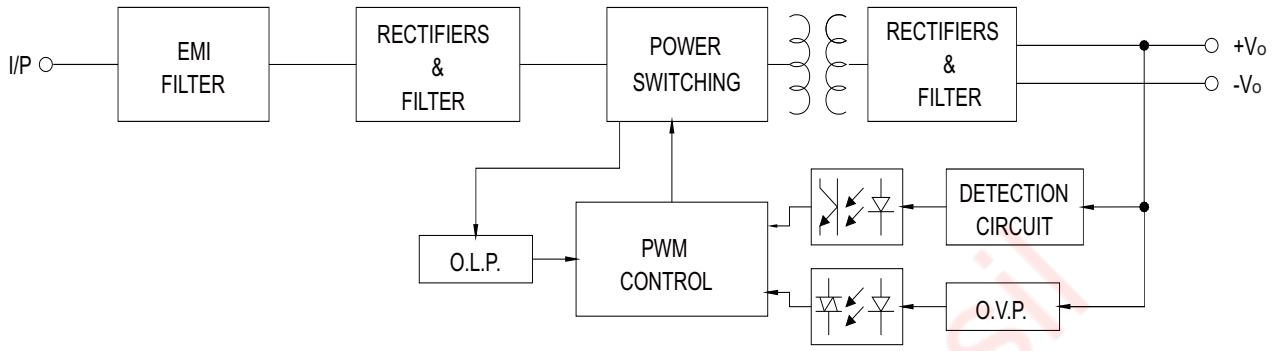

■ Derating Curve

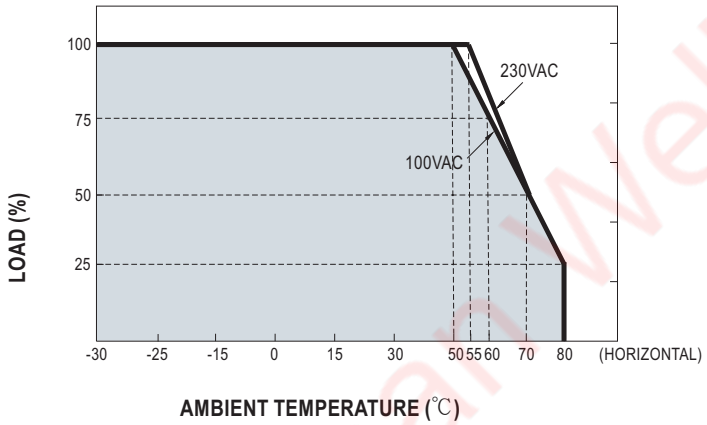

■ Output Derating VS Input Voltage

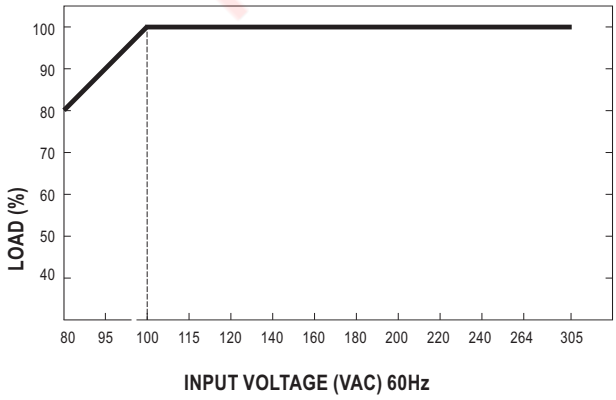

Mean Well Brasil

LRI Distribuída no Brasil pela LRI | vendas@lri.com.br | 51 2129-3000

■ Mechanical Specification

Case No.IRM60 Unit:mm

- **PCB mounting style (IRM-90)**

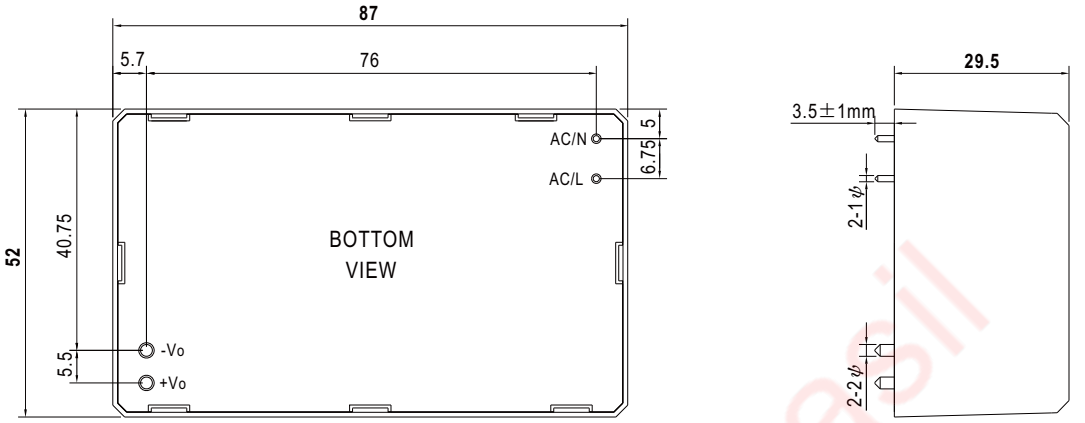

AC/L, AC/N P/N diameter:1ψ
+Vo, -Vo P/N diameter:2ψ

- **Screw terminal style (IRM-90-xxST)**

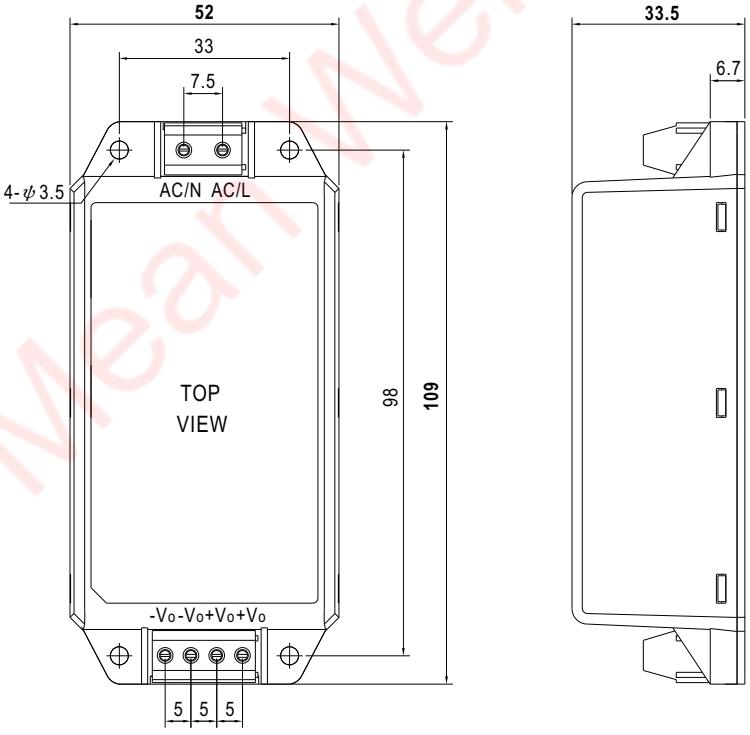

■ Installation Manual

Please refer to : http://www.meanwell.com/manual.html

LRI Distribuída no Brasil pela LRI | vendas@lri.com.br | 51 2129-3000