20W AC-DC PCB-Mount Green Power Module IRM-20 series

User's Manual



UL62368-1 BS EN/EN62368-1 R33100 RoHS TPTC004 IEC62368-1

ECO Automate Industrial Security Network Telecom

Features

- 2.06"x1.07"compact size
- Universal input 85~305VAC
- No load power consumption<0.1W
- EMI Class B without additional components
- Wide operating temp. range -30~70℃
- Protections: Short circuit / Overload / Over voltage
- Cooling by free air convection
- Isolation Class Ⅱ
- Pass LPS
- 3 years warranty

Applications

- Industrial electrical equipment
- Mechanical equipment
- Factory automation equipment
- Hand-held electronic device

GTIN CODE

MW Search: https://www.meanwell.com/serviceGTIN.aspx

Description

IRM-20 is a 20W miniature (52.4*27.2*24mm) AC-DC module-type power supply, ready to be soldered onto the PCB boards of various kinds of electronic instruments or industrial automation equipments. This product allows the universal input voltage range of 85~305VAC. The 94V-0 flame retardant plastic case and potted with silicone enhance the heat dissipation and meet the anti-vibration demand up to 2G; moreover, it provides the fundamental resistance to dust and moisture.

With the high efficiency up to 85% and the extremely low no-load power consumption below 0.1W, IRM-20 series fulfills the worldwide regulation for the low power consumption requirement for electronics. The entire series is a Class Ⅱ design (no FG pin), incorporating the built-in EMI filtering components, enabling the compliance with BS EN/EN55032 Class B; the supreme EMC features keep the end electronic units from electromagnetic interference.

Model Encoding

IRM - 20 - 5

- 5 — Output voltage
- 20 — Rated wattage
- IRM — Series name

Mean Well Brasil

20W AC-DC PCB-Mount Green Power Module IRM-20 series

SPECIFICATION

MODEL		IRM-20-3.3	IRM-20-5	IRM-20-12	IRM-20-15	IRM-20-24
OUTPUT	DC VOLTAGE	3.3V	5V	12V	15V	24V
	RATED CURRENT	4.5A	4A	1.8A	1.4A	0.9A
	CURRENT RANGE	0 ~ 4.5A	0 ~ 4A	0 ~ 1.8A	0 ~ 1.4A	0 ~ 0.9A
	RATED POWER	14.85W	20W	21.6W	21W	21.6W
	RIPPLE & NOISE (max.) Note.2	200mVp-p	200mVp-p	200mVp-p	200mVp-p	200mVp-p
	VOLTAGE TOLERANCE Note.3	±2.5%	±2.5%	±2.5%	±2.5%	±2.5%
	LINE REGULATION	±0.5%	±0.5%	±0.3%	±0.3%	±0.3%
	LOAD REGULATION	±1%	±1%	±0.5%	±0.5%	±0.5%
	SETUP, RISE TIME	1000ms, 20ms/230VAC 1000ms, 20ms/115VAC at full load				
	HOLD UP TIME (Typ.)	40ms/230VAC 8ms/115VAC at full load				
INPUT	VOLTAGE RANGE	85 ~ 305VAC 120 ~ 430VDC				
	FREQUENCY RANGE	47 ~ 440Hz				
	EFFICIENCY (Typ.)	76%	79%	84%	84%	85%
	AC CURRENT (Typ.)	0.6A/115VAC 0.4A/230VAC 0.3A/277VAC				
	INRUSH CURRENT (Typ.)	COLD START 20A/115VAC 40A/230VAC				
	LEAKAGE CURRENT	< 0.25mA/277VAC				
PROTECTION	OVERLOAD	115%~160% rated output power				
		Protection type : Hiccup mode, recovers automatically after fault condition is removed				
	OVER VOLTAGE	3.8 ~ 4.46V	5.75 ~ 6.75V	13.8 ~ 16.2V	17.25 ~ 20.25V	27.6 ~ 32.4V
		Protection type : Shut off o/p voltage, clamping by zener diode				
ENVIRONMENT	WORKING TEMP.	-30 ~ +70℃ (Refer to "Derating Curve")				
	WORKING HUMIDITY	20 ~ 90% RH non-condensing				
	STORAGE TEMP., HUMIDITY	-40 ~ +85℃, 10 ~ 95% RH				
	TEMP. COEFFICIENT	±0.03%/℃ (0 ~ 50℃)				
	VIBRATION	10 ~ 500Hz, 2G 10min./1cycle, period for 60min. each along X, Y, Z axes				
	SOLDERING TEMPERATURE	Wave soldering: 265℃,5s (max.); Manual soldering: 390℃,3s (max.)				
	OPERATING ALTITUDE Note.4	2000 meters				
SAFETY & EMC (Note.5)	SAFETY STANDARDS	IEC62368-1, UL62368-1, TUV BS EN/EN62368-1, EAC TP TC 004, BSMI CNS14336-1 approved				
	WITHSTAND VOLTAGE	I/P-O/P:3KVAC				
	ISOLATION RESISTANCE	I/P-O/P:100M Ohms / 500VDC / 25℃/ 70% RH				
	EMC EMISSION	**Parameter**	**Standard**	**Test Level / Note**		
		Conducted	BS EN/EN55032(CISPR32), CNS13438	Class B		
		Radiated	BS EN/EN55032(CISPR32), CNS13438	Class B		
		Harmonic Current (Note 5)	BS EN/EN61000-3-2	Class A		
		Voltage Flicker	BS EN/EN61000-3-3	-------		
	EMC IMMUNITY	BS EN/EN55035, BS EN/EN61000-6-2				
		Parameter	**Standard**	**Test Level /Note**		
		ESD	BS EN/EN61000-4-2	Level 3, 8KV air; Level 2, 4KV contact, criteria A		
		Radiated Susceptibility	BS EN/EN61000-4-3	Level 3, criteria A		
		EFT/Burest	BS EN/EN61000-4-4	Level 3, criteria A		
		Surge	BS EN/EN61000-4-5	Level 4,2KV/L-N, criteria A		
		Conducted	BS EN/EN61000-4-6	Level 3, criteria A		
		Magnetic Field	BS EN/EN61000-4-8	Level 4, criteria A		
		Voltage Dips and interruptions	BS EN/EN61000-4-11	＞95% dip 0. 5 periods, 30% dip 25 periods, ＞95% interruptions 250 periods		
OTHERS	MTBF	10656.2K hrs min. Telcordia SR-332 (Bellcore) ; 970.3K hrs min. MIL-HDBK-217F (25℃)				
	DIMENSION	52.4*27.2*24mm (L*W*H)				
	PACKING	0.05Kg/240pcs/13Kg/0.94CUFT				

NOTE

1. All parameters NOT specially mentioned are measured at 230VAC input, rated load and 25℃ of ambient temperature.
2. Ripple & noise are measured at 20MHz of bandwidth by using a 12" twisted pair-wire terminated with a 0.1 μF & 47 μF parallel capacitor.
3. Tolerance : includes set up tolerance, line regulation and load regulation.
4. The ambient temperature derating of 3.5℃/1000m with fanless models and of 5℃/1000m with fan models for operating altitude higher than 2000m(6500ft).
5. The power supply is considered as an independent unit ,but the final equipment still need to re-confirm that the whole system complies with the EMC directives. For guidance on how to perform these EMC tests, please refer to “EMI testing of component power supplies.” (as available on https://www.meanwell.com//Upload/PDF/EMI_statement_en.pdf)

※ Product Liability Disclaimer : For detailed information, please refer to https://www.meanwell.com/serviceDisclaimer.aspx

Mean Well Brasil

LRI Distribuída no Brasil pela LRI | vendas@lri.com.br | 51 2129-3000

■ Block Diagram

fosc : 65KHz

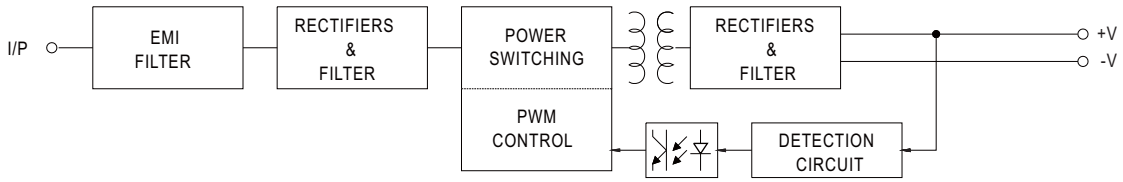

■ Derating Curve

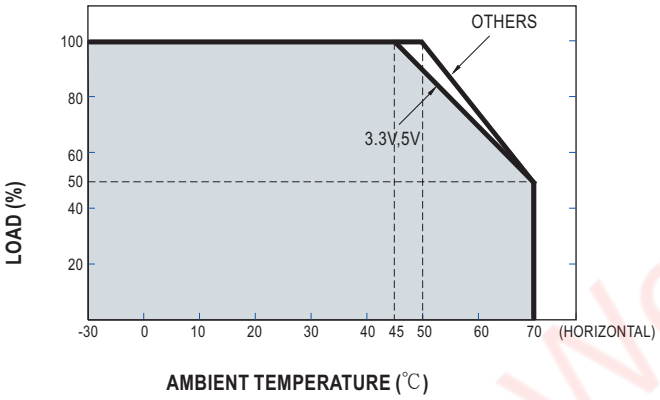

■ Output Derating VS Input Voltage

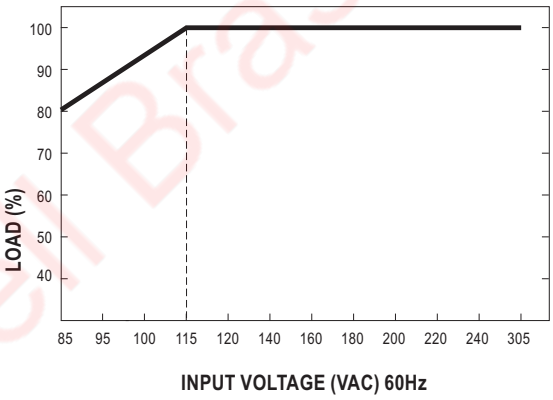

■ Mechanical Specification

Case No.219A Unit:(mm)

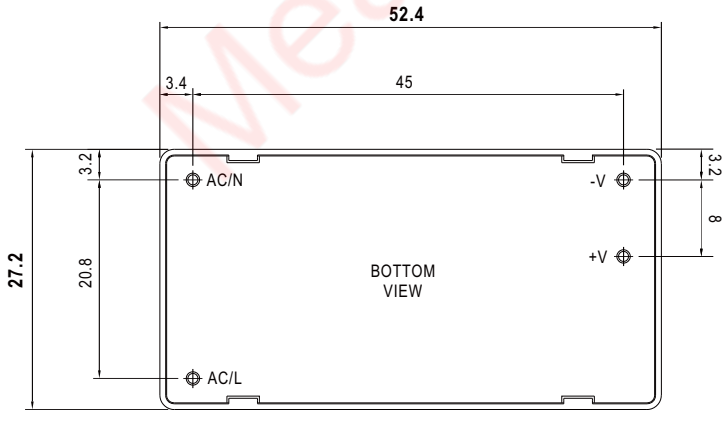

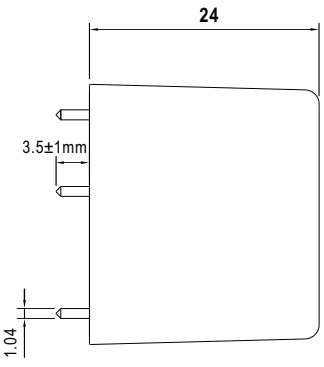

P/N diameter:1.04

■ Installation Manual

Please refer to : http://www.meanwell.com/manual.html

Mean Well Brasil