2W Single Output Encapsulated Type

IRM-02 series

User's Manual



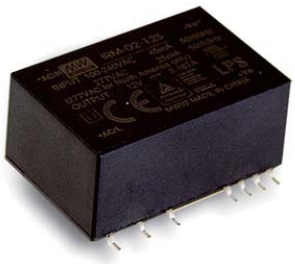

R33100 RoHS | LPS | c UL us UL62368-1 | BS EN/EN62368-1 | EAC TPTC004 | CB IEC62368-1 | CE | UKCA

Features

- Universal AC input / Full range
- No load power consumption<0.075W
- Compact size
- Comply with BS EN/EN55032 Class B without any additional components
- Protections: Short circuit / Overload / Over voltage
- Cooling by free air convection
- Isolation Class II
- High reliability, low cost
- 3 years warranty

Applications

- Industrial electrical equipment
- Mechanical equipment
- Factory automation equipment
- Handheld electronic device

GTIN CODE

MW Search: https://www.meanwell.com/serviceGTIN.aspx

Description

IRM-02 is a 2W miniature (33.7*22.2*15mm) AC-DC module-type power supply, ready to be soldered onto the PCB boards of various kinds of electronic instruments or industrial automation equipments. This product allows a universal input voltage range of 85~305VAC. The phenolic case and potted with silicone enhance the heat dissipation and meet the anti-vibration demand up to 5G; moreover, it provides the fundamental resistance to dust and moisture. With the high efficiency up to 77% and the extremely low no-load power consumption below 0.075W, IRM-02 series fulfills the worldwide regulation for the low power consumption requirement for electronics. The entire series is a Class II design (no FG pin), incorporating the built-in EMI filtering components, enabling the compliance with BS EN/EN55032 Class B; the supreme EMC features keep the end electronic units from electromagnetic interference. In addition to module-type model, IRM-02 series also offers the SMD style model.

Model Encoding

IRM - 02 - 5 S

- S: Blank : PCB mounting style; S : SMD style
- 5: Output voltage
- 02: Output wattage
- IRM: Series name

Mean Well Brasil

SPECIFICATION

MODEL		IRM-02-3.3	IRM-02-5	IRM-02-9	IRM-02-12	IRM-02-15	IRM-02-24
OUTPUT	DC VOLTAGE	3.3V	5V	9V	12V	15V	24V
	RATED CURRENT	600mA	400mA	222mA	167mA	133mA	83mA
	CURRENT RANGE	0 ~ 600mA	0 ~ 400mA	0 ~ 222mA	0 ~ 167mA	0 ~ 133mA	0 ~ 83mA
	RATED POWER	2W	2W	2W	2W	2W	2W
	RIPPLE & NOISE (max.) Note.2	150mVp-p	150mVp-p	150mVp-p	150mVp-p	200mVp-p	200mVp-p
	VOLTAGE TOLERANCE Note.3	±2.5%	±2.5%	±2.5%	±2.5%	±2.5%	±2.5%
	LINE REGULATION	±0.5%	±0.5%	±0.5%	±0.5%	±0.5%	±0.5%
	LOAD REGULATION	±0.5%	±0.5%	±0.5%	±0.5%	±0.5%	±0.5%
	SETUP, RISE TIME	600ms, 30ms/230VAC 600ms, 30ms/115VAC at full load					
	HOLD UP TIME (Typ.)	40ms/230VAC 12ms/115VAC at full load					
INPUT	VOLTAGE RANGE	85 ~ 305VAC 120 ~ 430VDC					
	FREQUENCY RANGE	47 ~ 63Hz					
	EFFICIENCY (Typ.)	66%	70%	72%	74%	75%	77%
	AC CURRENT (Typ.)	45mA/115VAC 30mA/230VAC 25mA/277VAC					
	INRUSH CURRENT (Typ.)	5A/115VAC 10A/230VAC					
	LEAKAGE CURRENT	< 0.25mA/277VAC					
PROTECTION	OVERLOAD	≥110% rated output power					
		Protection type : Hiccup mode, recovers automatically after fault condition is removed					
	OVER VOLTAGE	3.8 ~ 4.9V	5.2 ~ 6.8V	10.3 ~ 12.2V	12.6 ~ 16.2V	15.7 ~ 20.3V	25.2 ~ 32.4V
		Protection type : Shut off o/p voltage, clamping by zener diode					
ENVIRONMENT	WORKING TEMP.	-30 ~ +85℃ (Refer to "Derating Curve")					
	WORKING HUMIDITY	20 ~ 90% RH non-condensing					
	STORAGE TEMP., HUMIDITY	-40 ~ +100℃, 10 ~ 95% RH					
	TEMP. COEFFICIENT	±0.03%/℃ (0 ~ 75℃)					
	VIBRATION	10 ~ 500Hz, 5G 10min./1cycle, period for 60min. each along X, Y, Z axes					
	SOLDERING TEMPERATURE	Wave soldering: 265℃,5s (max.); Manual soldering: 390℃,3s (max.); Reflow soldering(SMD style): 240℃,10s (max.)					
SAFETY & EMC	SAFETY STANDARDS	UL62368-1, TUV BS EN/EN62368-1, EAC TP TC 004, BSMI CNS14336-1 approved, Design refer to BS EN/EN61558-1/-2-16					
	WITHSTAND VOLTAGE	I/P-O/P:3KVAC					
	ISOLATION RESISTANCE	I/P-O/P:100M Ohms / 500VDC / 25℃/ 70% RH					
	EMC EMISSION	Compliance to BS EN/EN55032 (CISPR32) Class B, BS EN/EN61000-3-2,-3, EAC TP TC 020, CNS13438 Class B					
	EMC IMMUNITY	Compliance to BS EN/EN61000-4-2,3,4,5,6,8,11, BS EN/EN55035, heavy industry level (surge L-N : 1KV), EAC TP TC 020					
OTHERS	MTBF	13571.4K hrs min. Telcordia SR-332 (Bellcore) ; 1960.2K hrs min. MIL-HDBK-217F (25℃)					
	DIMENSION	PCB mounting style : 33.7*22.2*15mm (L*W*H) SMD style : 33.7*22.2*16mm (L*W*H)					
	PACKING	PCB mounting style : 0.024Kg; 640pcs/ 16.3 Kg/ 0.84CUFT SMD style : 0.024Kg; 640 pcs/ 16.3 Kg/ 0.84CUFT					

NOTE

1. All parameters NOT specially mentioned are measured at 230VAC input, rated load and 25℃ of ambient temperature.
2. Ripple & noise are measured at 20MHz of bandwidth by using a 12" twisted pair-wire terminated with a 0.1uf & 47uf parallel capacitor.
3. Tolerance : includes set up tolerance, line regulation and load regulation.
4. The ambient temperature derating of 3.5℃/1000m with fanless models and of 5℃/1000m with fan models for operating altitude higher than 2000m(6500ft).

※ Product Liability Disclaimer : For detailed information, please refer to https://www.meanwell.com/serviceDisclaimer.aspx

Mean Well Brasil

Block Diagram

fosc : 130KHz

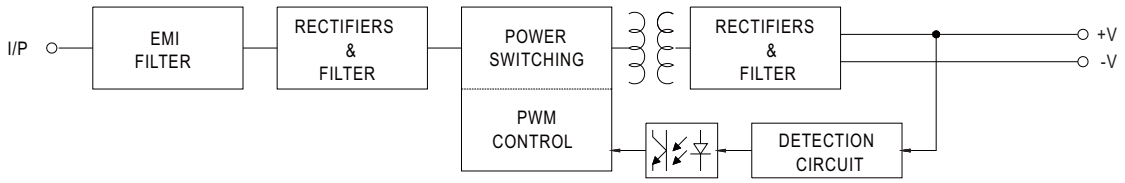

Derating Curve

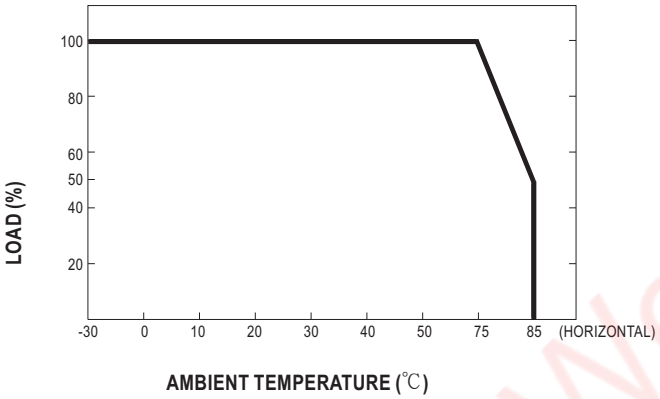

Static Characteristics

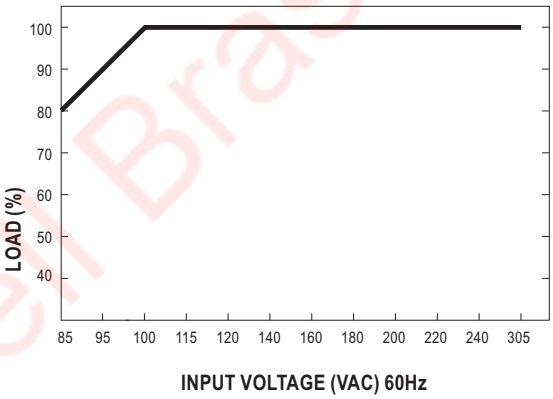

Mean Well Brasil

■ Mechanical Specification

Case No.IRM02
Unit:mm[inch]

◎ PCB mounting style

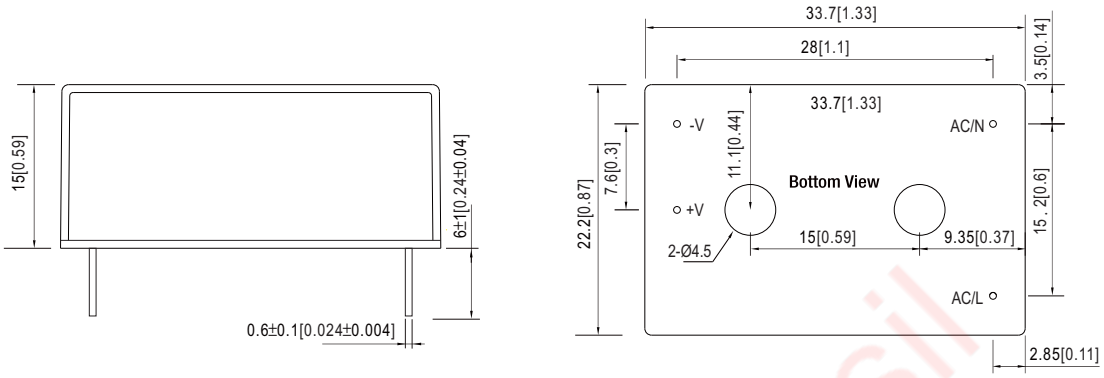

◎ SMD style

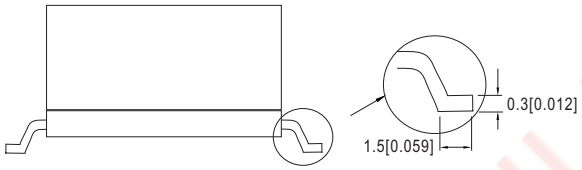

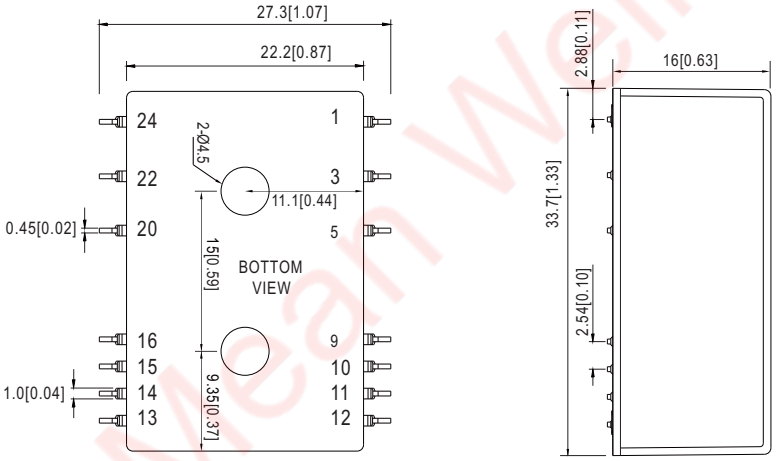

Pin No.	Assignment
1	AC/L
24	AC/N
13	-Vo
12	+Vo
others	N.C.

■ Recommended PCB Layout (for SMD style) (Reflow soldering method available)

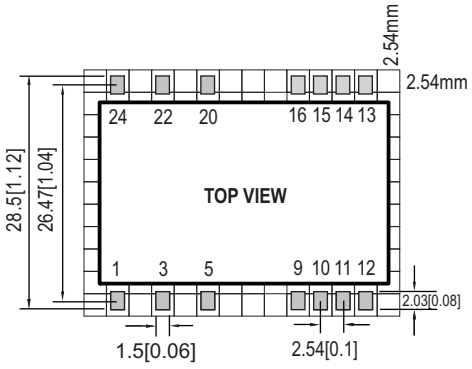

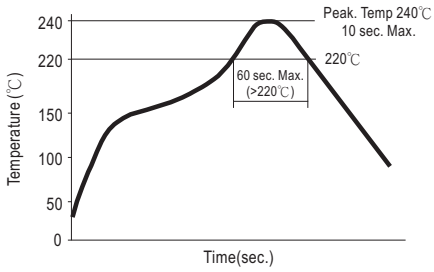

Remark : The curve applies only to the " Hot Air Reflow Soldering"

LRI Distribuída no Brasil pela LRI | vendas@lri.com.br | 51 2129-3000

■ Installation Manual

Please refer to : http://www.meanwell.com/manual.html