5W AC-DC Industrial On Board Type Power Module IOB-05 series

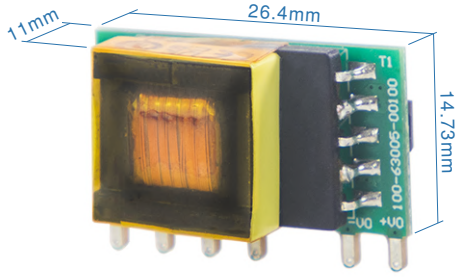

Automate Industrial Security Network Telecom

Features

- Assemble on the main PCB of the system
- 1"x0.6"compact size
- 85~305Vac input (277Vac available)
- No load power consumption <0.15W
- -40~85℃ wide operating temperature
- Protections: Short circuit / Overload / Over voltage
- Cooling by free air convection
- Safety Class Ⅱ
- 3 years warranty

Applications

- Industrial electrical equipment
- Mechanical equipment
- Factory automation equipment
- Hand-held electronic device
- Smart home
- Industrial control

GTIN CODE

MW Search: https://www.meanwell.com/serviceGTIN.aspx

Description

The IOB-05 series is a compact and reliable AC-DC open frame power module featuring high efficiency and low power consumption. It is particularly well-suited for space-constrained applications with stringent energy efficiency requirements. The product features a compact design and supports universal input voltage range of 85~305Vac. With ultra-low standby power consumption <0.15W, it is energy efficiency and eco-friendly. It also offers an ultra-wide operating temperature range of -40℃~+85℃ as well as complete protection functions to ensure safe and reliable operation. These features make the product suitable for applications with strict space constraints, such as industrial automation, power metering, and smart devices.

Model Encoding

IOB - 05 - 05

- 05 → Output voltage (3.3/5/9/12/15/24Vdc)
- 05 → Rated wattage
- IOB → Series name

LRI Distribuída no Brasil pela LRI | vendas@lri.com.br | 51 2129-3000

SPECIFICATION	IOB-05-03	IOB-05-05	IOB-05-09	IOB-05-12	IOB-05-15	IOB-05-24
OUTPUT						
DC VOLTAGE	3.3V	5V	9V	12V	15V	24V
RATED CURRENT	1A	1A	0.56A	0.42A	0.34A	0.21A
CURRENT RANGE	0.1 ~ 1A	0.1 ~ 1A	0.056 ~ 0.56A	0.042 ~ 0.42A	0.034 ~ 0.34A	0.021 ~ 0.21A
RATED POWER	3.3W	5W	5.04W	5.04W	5.1W	5.04W
RIPPLE & NOISE (max.) Note.2	150mV					
INITIAL SET POINT ACCURACY	±5% @10% ~ 100% load					
LINE REGULATION	±1.5%					
LOAD REGULATION	±3%					
CAPACITOR LOAD (Max.)	2200μF	1500μF	680μF	470μF	330μF	100μF
INPUT						
VOLTAGE RANGE	85 ~ 305Vac 100 ~ 430Vdc					
FREQUENCY RANGE	47 ~ 63Hz					
EFFICIENCY (Typ.)	69%	76%	77%	79%	79%	81%
AC CURRENT (Typ.)	0.2A/115Vac 0.1A/230Vac					
INRUSH CURRENT (Typ.)	20A/115Vac 40A/230Vac					
NO LOAD POWER CONSUMPTION	<0.15W					
PROTECTION						
SHORT CIRCUIT	Protection type : Continuous, automatic recovery, Hiccup mode					
OVERLOAD	>110% rated output power					
	Protection type : Hiccup mode, recovers automatically after fault condition is removed					
OVER VOLTAGE (Max.)	9Vdc	9Vdc	12Vdc	16Vdc	20Vdc	30Vdc
	Protection type : Output voltage clamp					
ENVIRONMENT						
COOLING	Free-air convection					
WORKING TEMP. Note.4	-40 ~ +85℃ (Refer to "Derating Curve")					
WORKING HUMIDITY	20% ~ 90% RH non-condensing					
STORAGE TEMP., HUMIDITY	-40 ~ +105℃, 10 ~ 95% RH non-condensing					
TEMP. COEFFICIENT	±0.15% / ℃ max. (0 ~ 85℃)					
VIBRATION	10 ~ 500Hz, 2G 10min./1cycle, period for 60min. each along X, Y, Z axes					
SAFETY & EMC (Note.5)						
SAFETY STANDARDS	LVD IEC62368-1 approved					
WITHSTAND VOLTAGE	I/P-O/P:3KVac leakage current <5mA					
ISOLATION RESISTANCE	I/P-O/P:1000M Ohms / 500Vdc / 25℃/ 70% RH					
EMC EMISSION	**Parameter**	**Standard**	**Test Level / Note**			
	Conducted	BS EN/EN55032(CISPR32)	Class A without external components Class B with external components			
	Radiated	BS EN/EN55032(CISPR32)				
EMC IMMUNITY	**Parameter**	**Standard**	**Test Level / Note**			
	ESD	BS EN/EN61000-4-2	Level 3, ±6KV contact			
	Radiated Susceptibility	BS EN/EN61000-4-3	Level 3, 10m/V			
	EFT/Bursts	BS EN/EN61000-4-4	Level 2, ±2KV			
	Surge	BS EN/EN61000-4-5	Level 2, ±1KV Line-Line			
	Conducted	BS EN/EN61000-4-6	Level 3, 10V(e.m.f.)			
	Voltage Dips and Interruptions	BS EN/EN61000-4-11	0%, 70% perf. Criteria B			
OTHERS						
MTBF (Typ.)	>10000Khrs MIL-HDBK-217F(25℃)					
DIMENSION (L*W*H)	**26.4*14.73*11mm (1.039*0.579*0.433 inch)**					
PACKING	5.45g ; 150pcs/per Tray, 1500pcs/10 Tray/per carton					

NOTE

1.All parameters NOT specially mentioned are measured at 230Vac input, rated load and 25℃ of ambient temperature.
2.Ripple & noise are measured at 20MHz of bandwidth by using a 12" twisted pair-wire terminated with a 0.1μF & 47μF parallel capacitor.
3.Length of set up time is measured at first cold start. Turning ON/OFF the power supply may lead to increase of the set up time.
4.When starting at a low temperature of -40℃, the output capacitor needs to be equipped with a solid capacitor to meet the load reduction curve requirements.
5.The final equipment must be re-confirm that it still meet EMC directives. For guidance on how to perform these EMC tests, please refer to “EMI testing of component power supplies.”(as available on http://www.meanwell.com)
※ Product Liability Disclaimer : For detailed information, please refer to https://www.meanwell.com/serviceDisclaimer.aspx

LRI Distribuída no Brasil pela LRI | vendas@lri.com.br | 51 2129-3000

■ Derating Curve

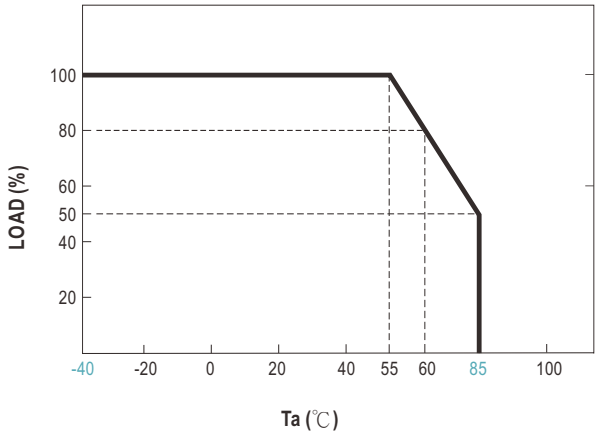

■ Output Derating VS Input Voltage

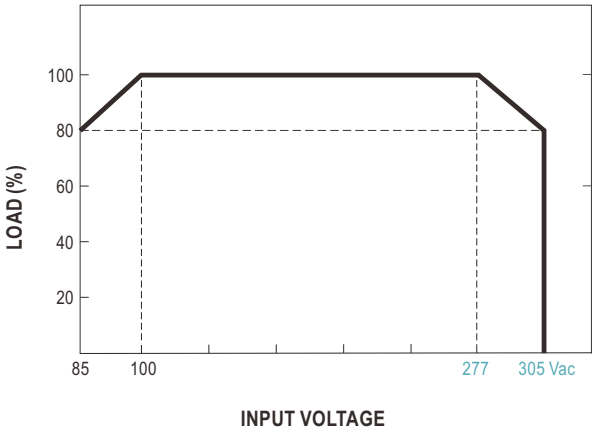

■ Additional Circuit Design Reference

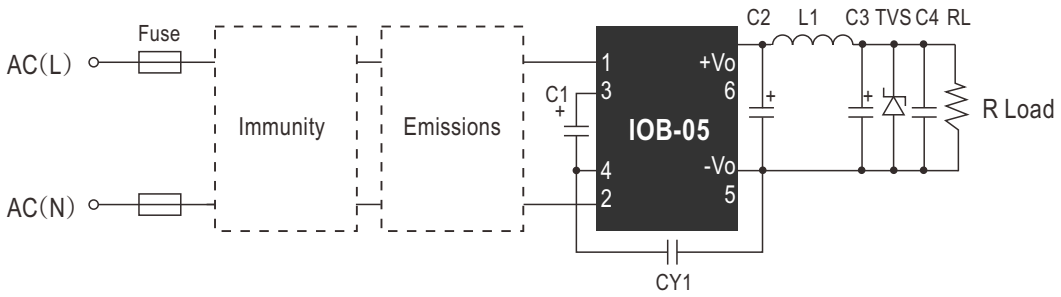

IOB-05 Series additional component selection guide (no EMC devices)							
Model No.	C1[1] (required)	C2 (required)	L1 (required)	C3[2] (required)	C4	CY1 (required)	TVS[3]
IOB-05-3.3	22uF/450V (-40°C to 85°C with 85-305 Vac input) 10uF/450V (-25°C to 85°C with 85-305 Vac input, or -40°C to 85°C with 165-305 Vac input)	820uF/6.3V (solid-state capacitor)	4.7uH Max,60mΩ/ 2.2A	100uF/35V	0.1uF/50V (ceramic capacitor)	1.0nF/ 400Vac	SMBJ7.0A
IOB-05-05		470uF/16V (solid-state capacitor)					SMBJ7.0A
IOB-05-09		270uF/16V (solid-state capacitor)		47uF/35V			SMBJ12A
IOB-05-12							SMBJ20A
IOB-05-15		220uF/35V					SMBJ20A
IOB-05-24							SMBJ30A

Note: 1. Recommended to use a capacitor with ripple current >200 mA at 100 KHz.

2. Recommended to use a polymer capacitor (at -40°C) with at least 20% margin on voltage rating 20% margin on voltage rating.

3. A suppressor diode (TVS) is recommended to protect the downstream application in case of converter failure and should be rated for a minimum of 1.2 times the converter's output voltage.

LRI Distribuída no Brasil pela LRI | vendas@lri.com.br | 51 2129-3000

■ Additional EMC Suggestion Circuit

IOB-05 Series Environmental and EMC selection guide						
Recommended circuit	Application environmental	Typical industry	Input voltage range	Environment temperature	Emissions	Immunity
1	Basic application	None	85~305Vac	-40°C to 85°C	Class A	Class III
2	Indoor civil environment	Smart home/Home appliances(2 Y-caps)		-25°C to 55°C	Class B	Class III
	Indoor general environment	Intelligent building/ Intelligent agriculture				
3	Indoor industrial environment	Manufacturing workshop		-25°C to 55°C	Class B	Class IV
4	Outdoor general environment	ITS/Video monitoring/ Charging point/ Communication/Security and protection		-40°C to 85°C	Class A	Class IV

Immunity design circuits reference		Emissions design circuits reference	
Class III	Class IV	Class A	Class B
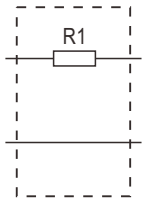	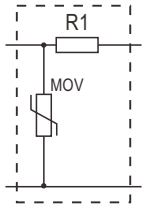	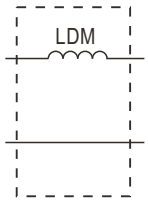	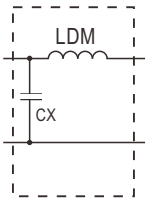

1.Circuit 1 - Basic - Application

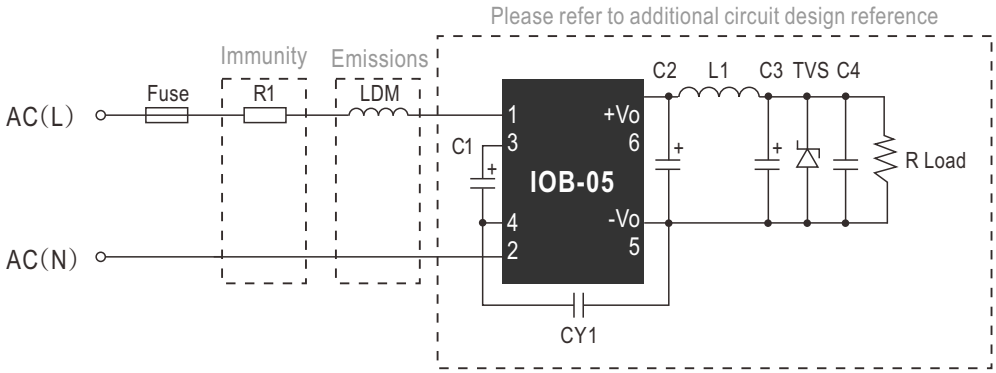

Application environmental	Ambient temperature range	Immunity Class	Emissions Class
Basic application	-40°C ~85°C	Class III	Class A

Component	Recommended value
Fuse(required)	1A/300V,slow blow
R1 (wire-wound resistor, required)	12Ω/3W
LDM	4.7mH/15Ω max/0.2A min

Note: R1 must be a wire-wound resistor; do not use a chip or carbon film resistor.

LRI Distribuída no Brasil pela LRI | vendas@lri.com.br | 51 2129-3000

2.Circuit 2 - Indoor Civil / Indoor General Environment

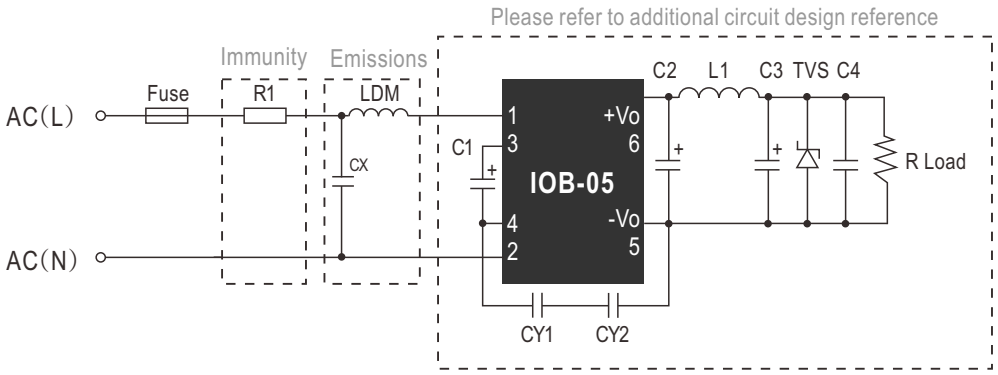

Application environmental	Ambient temperature range	Immunity Class	Emissions Class
Indoor civil / general	-25°C ~ 55°C	Class III	Class B

Component	Recommended value
R1(wire-wound resistor, required)	12Ω/3W
LDM	1.2mH/4Ω/0.2A
CX	0.1uF/310Vac
Fuse (required)	1A/300V, slow-blow

Note: 1. For Smart Home and Home Appliance applications two Y-capacitors are required in series (2.2nF/250Vac each)
2. Many safety standards require a bleeder resistor no greater than 3.8MΩ in parallel with the X-capacitor.
3. R1 must be a wire-wound resistor; do not use a chip or carbon film resistor.

3.Circuit 3 - Indoor General Environment

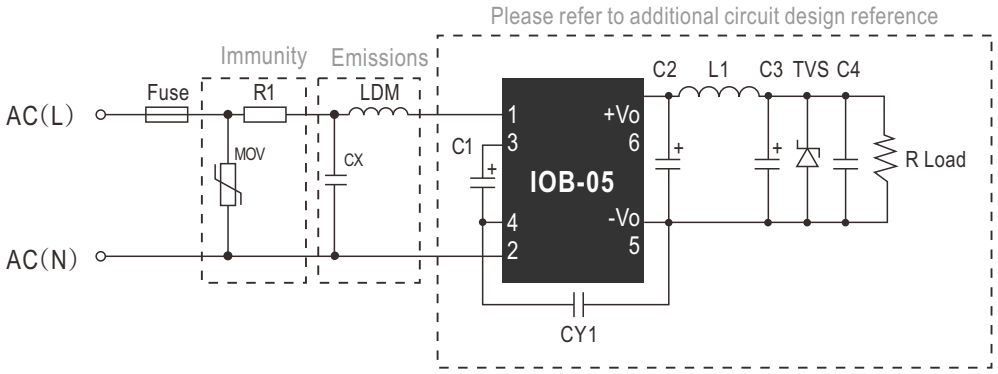

Application environmental	Ambient temperature range	Immunity Class	Emissions Class
Indoor industrial	-25°C ~ 55°C	Class IV	Class B

Component	Recommended value
MOV	S14K350
CX	0.1uF/310Vac
LDM	1.2mH/4Ω/0.2A
R1(wire - wound resistor, required)	12Ω/3W
Fuse (required)	2A/300V, slow-blow

Note: 1. Many safety standards require a bleeder resistor no greater than 3.8MΩ in parallel with the X-capacitor.
2. R1 must be a wire-wound resistor; do not use a chip or carbon film resistor.

LRI Distribuída no Brasil pela LRI | vendas@lri.com.br | 51 2129-3000

4.Circuit 4 - Outdoor General Environment

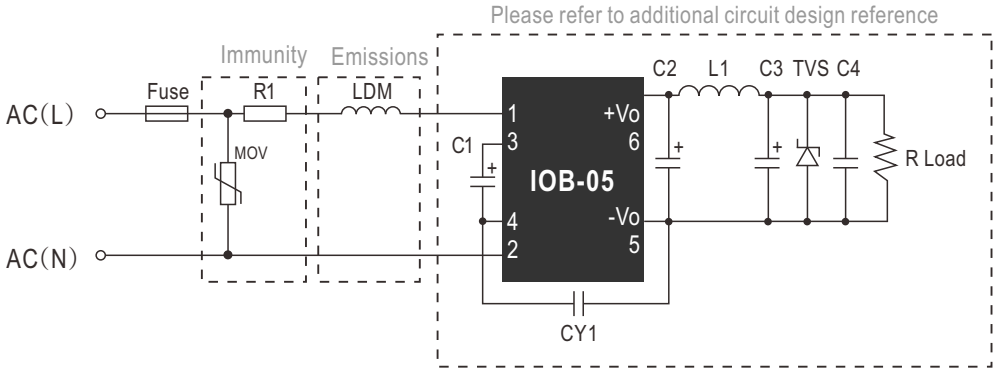

Application environmental	Ambient temperature range	Immunity Class	Emissions Class
Outdoor general environment	-40°C ~ 85°C	Class IV	Class A

Component	Recommended value
MOV	S14K350
LDM	4.7mH/15Ω/0.2A
R1 (wire-wound resistor, required)	12Ω/0.2W
Fuse (required)	2A/300V, slow-blow

Note: R1 must be a wire-wound resistor; do not use a chip or carbon film resistor.

Distribuída no Brasil pela LRI | vendas@lri.com.br | 51 2129-3000

■ Mechanical Specification

- All dimensions in mm
- Tolerance: ±1mm

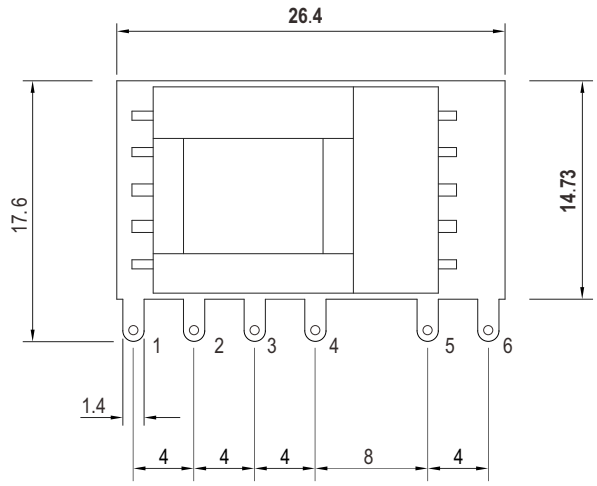

(Front View)

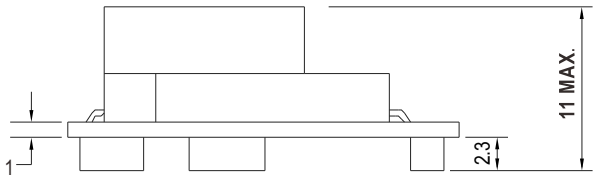

(Side View)

■ Pin Assignment

Pin-Out	
Pin No.	Output
1	AC/L
2	AC/N
3	+V(cap)
4	-V(cap)
5	-Vout
6	+Vout

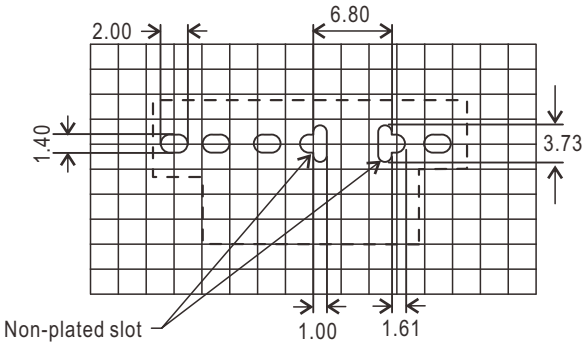

Note: Grid 2.54*2.54mm

LRI Distribuída no Brasil pela LRI | vendas@lri.com.br | 51 2129-3000

■ Packing

Standard Packing	MPQ Per Tray(PCS)	One Tray G.W.	Max. Q'TY/ Carton(PCS)	One Carton G.W.
Unit : mm 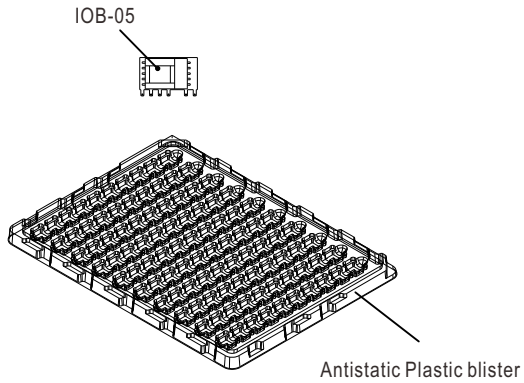 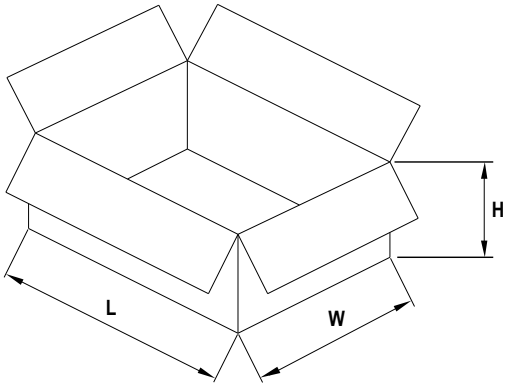 CARTON L457 x W342 x H227	150	660g	1500	11.5Kg

■ Installation Manual

Please refer to : http://www.meanwell.com/manual.html

Distribuída no Brasil pela LRI | vendas@lri.com.br | 51 2129-3000