300W Single Output with PFC Function

HSP-300 series



User's Manual

Click Me

Features :

- Universal AC input / Full range
- Withstand 300VAC surge input for 5 seconds
- Built-in active PFC function
- Low leakage current<1mA
- Protections: Short circuit / Overload / Over voltage / Over temperature
- Cooling by free air convection
- Low profile:31mm
- Conformal coated
- LED indicator for power on
- Suitable for high efficiency moving sign applications
- 3 years warranty

GTIN CODE

MW Search:https://www.meanwell.com/serviceGTIN.aspx

SPECIFICATION

MODEL		HSP-300-2.8	HSP-300-4.2	HSP-300-5
OUTPUT	DC VOLTAGE	2.8V	4.2V	5V
	RATED CURRENT	60A	60A	60A
	CURRENT RANGE Note.5	0 ~ 60A	0 ~ 60A	0 ~ 60A
	RATED POWER(convection)	168W	252W	300W
	RIPPLE & NOISE (max.) Note.2	110mVp-p	150mVp-p	150mVp-p
	VOLTAGE ADJ. RANGE	2.5~3V	3.6~4.4V	4.5~5.5V
	VOLTAGE TOLERANCE Note.3	±2.0%	±2.0%	±2.0%
	LINE REGULATION	±0.5%	±0.5%	±0.5%
	LOAD REGULATION	±1.0%	±1.0%	±1.0%
	SETUP, RISE TIME	2000ms, 100ms/230VAC 3000ms, 100ms/115VAC at full load		
	HOLD UP TIME (Typ.)	8ms/230VAC 8ms/115VAC at full load		
INPUT	VOLTAGE RANGE Note.4	180 ~ 264VAC 254 ~ 370VDC or 90~135VAC 127~190VDC		
	FREQUENCY RANGE	47 ~ 63Hz		
	POWER FACTOR (Typ.)	PF≥0.93/230VAC PF ≥0.98/115VAC at full load		
	EFFICIENCY (Typ.)	80%	85%	87%
	AC CURRENT (Typ.)	2.8A/115VAC 1.4A/230VAC	3.9A/115VAC 1.95A/230VAC	4.7A/115VAC 2.35A/230VAC
	INRUSH CURRENT (Typ.)	Cold start 30A/115VAC 60A/230VAC		
	LEAKAGE CURRENT	<1mA / 240VAC		
PROTECTION	OVERLOAD	105~150% rated output power		
		Protection type : Hiccup mode, recovers automatically after fault condition is removed		
	SHORT CIRCUIT	Protection type : Hiccup mode, recovers automatically after fault condition is removed		
	OVER VOLTAGE	3.22 ~ 3.78V	4.6 ~ 5.4V	5.7 ~ 7.0V
		Protection type : Shut down o/p voltage, re-power on to recover		
	OVER TEMPERATURE	Shut down o/p voltage, recovers automatically after fault condition is removed		
ENVIRONMENT	WORKING TEMP.	-30 ~ +70℃ (Refer to "Derating Curve")		
	WORKING HUMIDITY	20 ~ 90% RH non-condensing		
	STORAGE TEMP., HUMIDITY	-40 ~ +85℃, 10 ~ 95% RH		
	TEMP. COEFFICIENT	±0.03%/℃ (0 ~ 60℃)		
	VIBRATION	10 ~ 500Hz, 2G 10min./1cycle, 60min. each along X, Y, Z axes		
SAFETY & EMC (Note 5)	SAFETY STANDARDS	UL60950-1,IEC62368-1,GB 4943.1,EAC TP TC 004,TUV BS EN/EN 62368-1 approved		
	WITHSTAND VOLTAGE	I/P-O/P:3.0KVAC I/P-FG:2.0KVAC O/P-FG:0.5KVAC		
	ISOLATION RESISTANCE	I/P-O/P, I/P-FG, O/P-FG:100M Ohms/500VDC/25℃/ 70%RH		
	EMC EMISSION	Compliance to BS EN/EN55032 (CISPR32),GB17625.1,GB/T 9254.1,Class B, BS EN/EN61000-3-2,-3, EAC TP TC 020		
	EMC IMMUNITY	Compliance to BS EN/EN61000-4-2,3,4,5,6,8,11;BS EN/EN55035, light industry level (surge 4KV), EAC TP TC 020		
OTHERS	MTBF	1277.1K hrs min. Telcordia SR-332(Bellcore) ; 148.2K hrs min. MIL-HDBK-217F (25℃)		
	DIMENSION	210*81*31mm (L*W*H)		
	PACKING	0.8kg; 15pcs/ 12.1kg/ 0.7CUFT		

NOTE

1. All parameters NOT specially mentioned are measured at 230VAC input, rated load and 25℃ of ambient temperature.
2. Ripple & noise are measured at 20MHz of bandwidth by using a 12" twisted pair-wire terminated with a 0.1uf & 47uf parallel capacitor.
3. Tolerance : includes set up tolerance, line regulation and load regulation.
4. Derating may be needed under low input voltages. Please check the static characteristics for more details.
5. Please refer to "Static Characteristics".
6. The power supply is considered a component which will be installed into a final equipment. All the EMC tests are been executed by mounting the unit on a 450mm*450mm metal plate with 1mm of thickness. The final equipment must be re-confirmed that it still meets EMC directives. For guidance on how to perform these EMC tests, please refer to "EMI testing of component power supplies." (as available on https://www.meanwell.com//Upload/PDF/EMI_statement_en.pdf)

※ Product Liability Disclaimer : For detailed information, please refer to https://www.meanwell.com/serviceDisclaimer.aspx

Distribuída no Brasil pela LRI | vendas@lri.com.br | 51 2129-3000

■ Mechanical Specification

CASE NO.: 233B Unit:mm Tolerance:±1

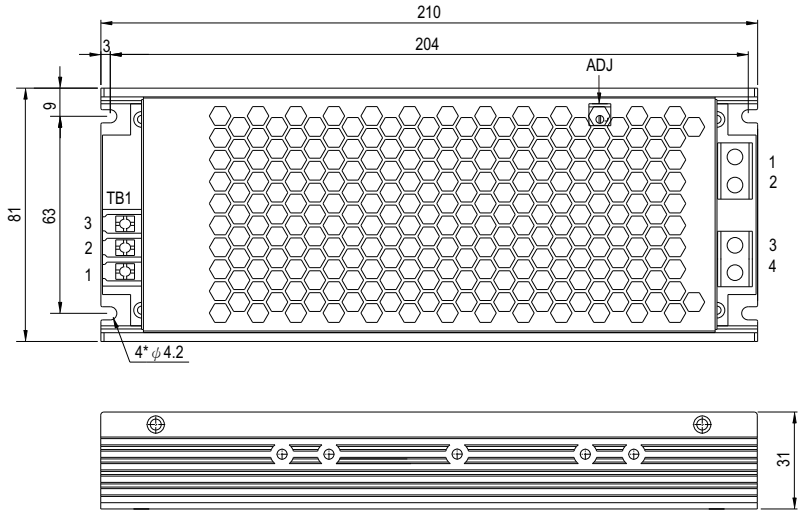

AC Input Terminal(TB1) pin NO. Assignment

Pin No.	Assignment	Terminal
1	AC/L	DG28C-B-03P-13-00AH
2	AC/N	
3	⏚	

DC Output Terminal pin NO. Assignment

Pin No.	Assignment	Terminal
1,2	+V	NEL-400-02P
3,4	-V	

■ Block Diagram

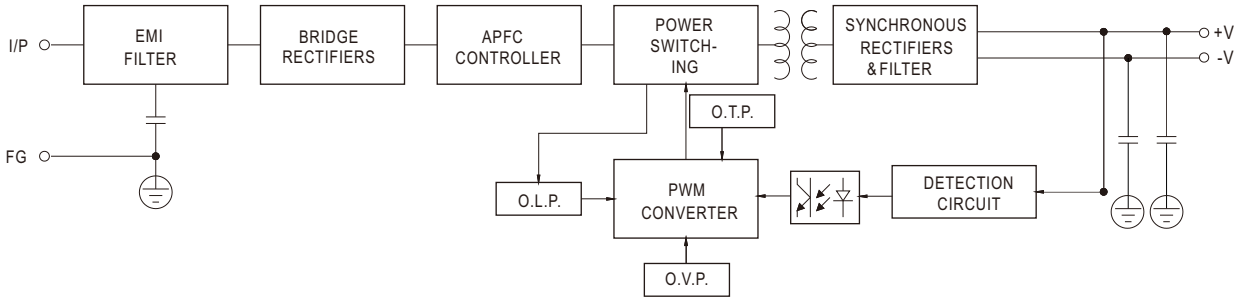

■ Derating Curve

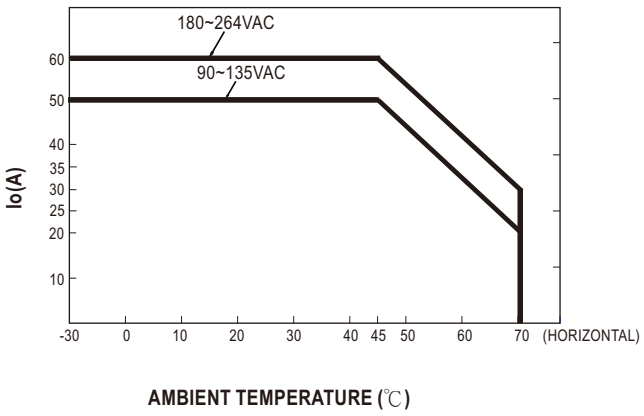

AMBIENT TEMPERATURE (℃)

■ Static Characteristics

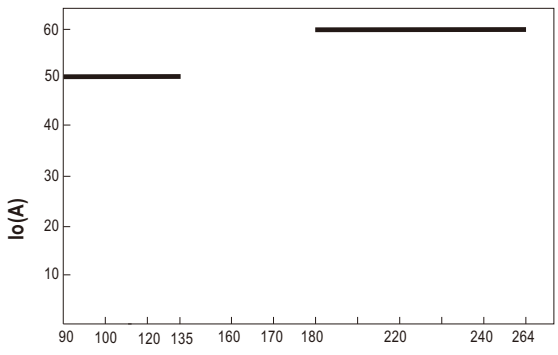

INPUT VOLTAGE (V) 60Hz

LRI Distribuída no Brasil pela LRI | vendas@lri.com.br | 51 2129-3000

■ Installation

1.Operate with additional aluminum plate

In order to meet the"Derating Curve"and the "Static Characteristics" ,HSP-300 series must be installed onto an aluminum plate(or the cabinet of the same size) on the bottom.The size of the suggested aluminum plate is shown as below. And for optimizing thermal performance, the aluminum plate must have an even and smooth surface (or coated with thermal grease), and HSP-300 series must be firmly mounted at the center of the aluminum plate.

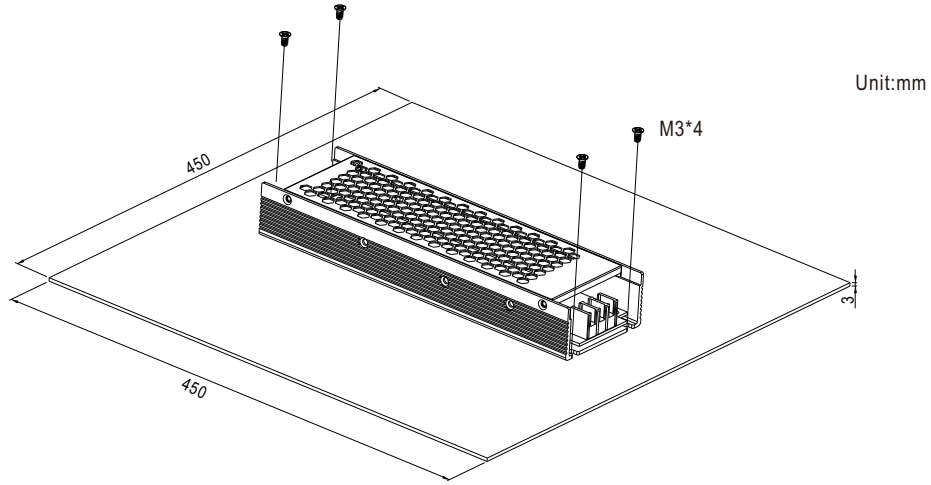

2.For heat dissipation, at least 5cm installation distance around the PSU should be kept, shown as below:

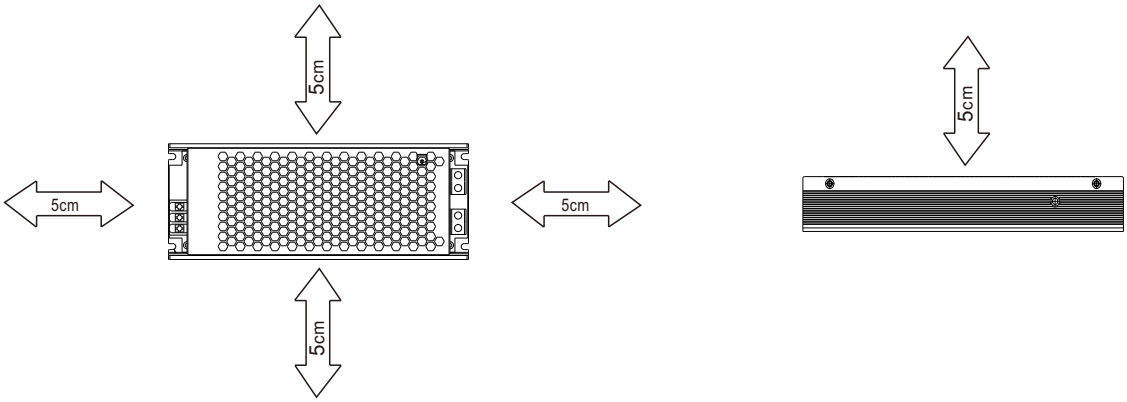

LRI Distribuída no Brasil pela LRI | vendas@lri.com.br | 51 2129-3000