300W Single Output with PFC Function — HRPG-300 series



Features :

- Universal AC input / Full range
- Built-in active PFC function, PF>0.95
- High efficiency up to 89%
- Withstand 300VAC surge input for 5 seconds
- Protections: Short circuit / Overload / Over voltage / Over temperature
- Built-in constant current limiting circuit
- 1U low profile 41mm
- Built-in cooling fan ON-OFF control
- Built-in DC OK signal
- Built-in remote ON-OFF control
- Standby 5V@0.3A
- Built-in remote sense function
- No load power consumption<0.5W (Note.6)
- 5 years warranty

User's Manual Click Me

GTIN CODE

MW Search: https://www.meanwell.com/serviceGTIN.aspx

UL62368-1 BS EN/EN62368-1 TPTC004 IEC62368-1

SPECIFICATION

MODEL		HRPG-300-3.3	HRPG-300-5	HRPG-300-7.5	HRPG-300-12	HRPG-300-15	HRPG-300-24	HRPG-300-36	HRPG-300-48
OUTPUT	DC VOLTAGE	3.3V	5V	7.5V	12V	15V	24V	36V	48V
	RATED CURRENT	60A	60A	40A	27A	22A	14A	9A	7A
	CURRENT RANGE	0 ~ 60A	0 ~ 60A	0 ~ 40A	0 ~ 27A	0 ~ 22A	0 ~ 14A	0 ~ 9A	0 ~ 7A
	RATED POWER	198W	300W	300W	324W	330W	336W	324W	336W
	RIPPLE & NOISE (max.) Note.2	80mVp-p	90mVp-p	100mVp-p	120mVp-p	150mVp-p	150mVp-p	250mVp-p	250mVp-p
	VOLTAGE ADJ. RANGE	2.8 ~ 3.8V	4.3 ~ 5.8V	6.8 ~ 9V	10.2 ~ 13.8V	13.5 ~ 18V	21.6 ~ 28.8V	28.8 ~ 39.6V	40.8 ~ 55.2V
	VOLTAGE TOLERANCE Note.3	±2.5%	±2.0%	±2.0%	±1.0%	±1.0%	±1.0%	±1.0%	±1.0%
	LINE REGULATION	±0.5%	±0.5%	±0.5%	±0.3%	±0.3%	±0.2%	±0.2%	±0.2%
	LOAD REGULATION	±1.0%	±1.0%	±1.0%	±0.5%	±0.5%	±0.5%	±0.5%	±0.5%
	SETUP, RISE TIME	1000ms, 50ms/230VAC 2500ms, 50ms/115VAC at full load							
	HOLD UP TIME (Typ.)	16ms/230VAC 16ms/115VAC at full load							
INPUT	VOLTAGE RANGE Note.5	85 ~ 264VAC 120 ~ 370VDC							
	FREQUENCY RANGE	47 ~ 63Hz							
	POWER FACTOR (Typ.)	PF>0.95/230VAC PF>0.99/115VAC at full load							
	EFFICIENCY (Typ.)	80%	82%	86%	88%	88%	87%	88%	89%
	AC CURRENT (Typ.)	3.5A/115VAC 1.8A/230VAC							
	INRUSH CURRENT (Typ.)	35A/115VAC 70A/230VAC							
	LEAKAGE CURRENT	<1.2mA / 240VAC							
PROTECTION	OVERLOAD	105 ~ 135% rated output power							
		Protection type : Constant current limiting, recovers automatically after fault condition is removed							
	OVER VOLTAGE	3.96 ~ 4.62V	6 ~ 7V	9.4 ~ 10.9V	14.4 ~ 16.8V	18.8 ~ 21.8V	30 ~ 34.8V	41.4 ~ 48.6V	57.6 ~ 67.2V
		Protection type : Shut down o/p voltage, re-power on to recover							
	OVER TEMPERATURE	Shut down o/p voltage, recovers automatically after temperature goes down							
FUNCTION	5V STANDBY	5VSB : 5V@0.3A ; tolerance±5%, ripple : 50mVp-p(max.)							
	DC OK SIGNAL	PSU turns on : 3.3 ~ 5.6V ; PSU turns off : 0 ~ 1V							
	REMOTE CONTROL	RC+ / RC-: 4 ~ 10V or open = power on ; 0 ~ 0.8V or short = power off							
	FAN CONTROL (Typ.)	Load 35±15% or RTH2≧50℃ Fan on							
ENVIRONMENT	WORKING TEMP.	-40 ~ +70℃ (Refer to "Derating Curve")							
	WORKING HUMIDITY	20 ~ 90% RH non-condensing							
	STORAGE TEMP., HUMIDITY	-40 ~ +85℃, 10 ~ 95% RH							
	TEMP. COEFFICIENT	±0.03%/℃ (0 ~ 50℃)							
	VIBRATION	10 ~ 500Hz, 5G 10min./1cycle, 60min. each along X, Y, Z axes							
SAFETY & EMC (Note 4)	SAFETY STANDARDS	UL62368-1, TUV BS EN/EN62368-1, EAC TP TC 004 approved							
	WITHSTAND VOLTAGE	I/P-O/P:3KVAC I/P-FG:2KVAC O/P-FG:0.5KVAC							
	ISOLATION RESISTANCE	I/P-O/P, I/P-FG, O/P-FG:100M Ohms / 500VDC / 25℃ / 70% RH							
	EMC EMISSION	Compliance to BS EN/EN55032 (CISPR32) Class B, BS EN/EN61000-3-2,-3, EAC TP TC 020							
	EMC IMMUNITY	Compliance to BS EN/EN61000-4-2,3,4,5,6,8,11,BS EN/EN55035, BS EN/EN61000-6-2,heavy industry level, EAC TP TC 020							
OTHERS	MTBF	1339.6K hrs min. Telcordia SR-332 (Bellcore) ; 176.1K hrs min. MIL-HDBK-217F (25℃)							
	DIMENSION	199*105*41mm (L*W*H)							
	PACKING	0.95Kg;15pcs/15.3Kg/0.83CUFT							

NOTE

1. All parameters NOT specially mentioned are measured at 230VAC input, rated load and 25℃ of ambient temperature.
2. Ripple & noise are measured at 20MHz of bandwidth by using a 12" twisted pair-wire terminated with a 0.1 μF & 47 μF parallel capacitor.
3. Tolerance : includes set up tolerance, line regulation and load regulation.
4. The power supply is considered a component which will be installed into a final equipment. All the EMC tests are been executed by mounting the unit on a 360mm*360mm metal plate with 1mm of thickness. The final equipment must be re-confirmed that it still meets EMC directives. For guidance on how to perform these EMC tests, please refer to "EMI testing of component power supplies." (as available on https://www.meanwell.com//Upload/PDF/EMI_statement_en.pdf)
5. Derating may be needed under low input voltages. Please check the derating curve for more details.
6. No load power consumption<0.5W when RC- & RC+ (CN100 pin4,6) 0 ~ 0.8V or short.
7. The ambient temperature derating of 3.5℃/1000m with fanless models and of 5℃/1000m with fan models for operating altitude higher than 2000m(6500ft).

※ Product Liability Disclaimer : For detailed information, please refer to https://www.meanwell.com/serviceDisclaimer.aspx

Distribuída no Brasil pela LRI | vendas@lri.com.br | 51 2129-3000

■ Mechanical Specification

(Unit: mm , tolerance ± 1mm)

Case No.980A

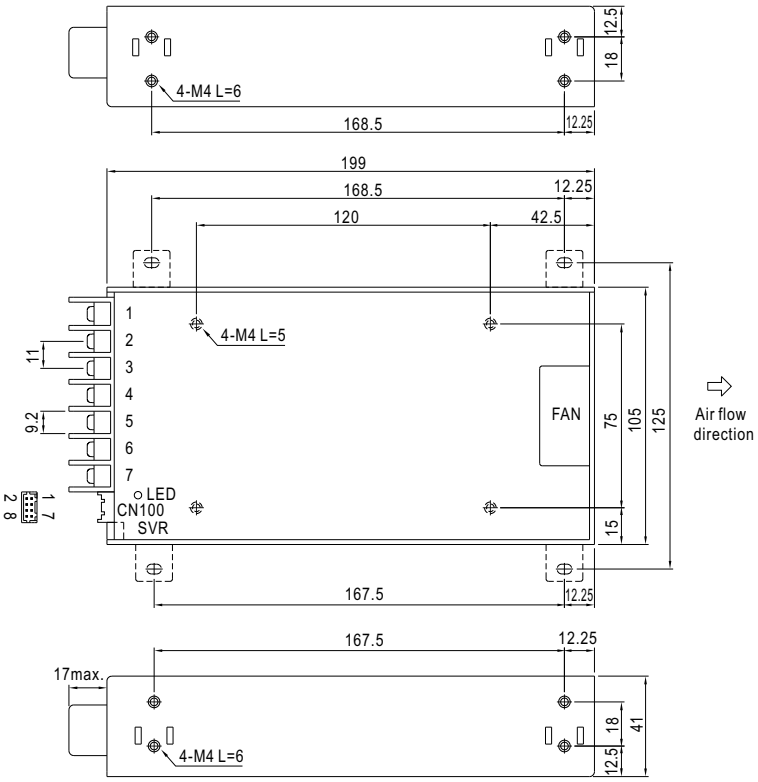

Terminal Pin No. Assignment

Pin No.	Assignment	Pin No.	Assignment
1	AC/L	4,5	DC OUTPUT -V
2	AC/N	6,7	DC OUTPUT +V
3	FG ⏚		

Connector Pin No. Assignment (CN100) :
HRS DF11-8DP-2DS or equivalent

Pin No.	Assignment	Mating Housing	Terminal
1	AUX	HRS DF11-8DS or equivalent	HRS DF11-**SC or equivalent
2	AUXG		
3	DC-OK		
4	RC-		
5	GND		
6	RC+		
7	+S		
8	-S		

■ Block Diagram

PWM fosc : 70KHz

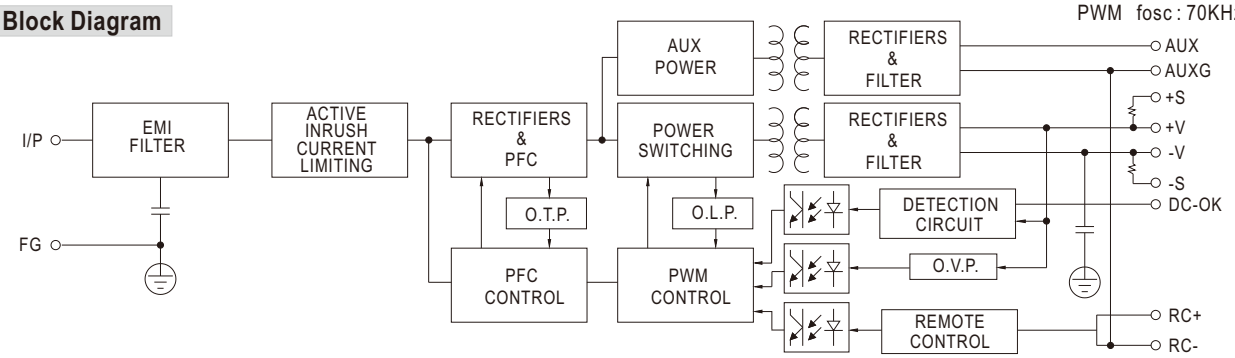

■ Derating Curve

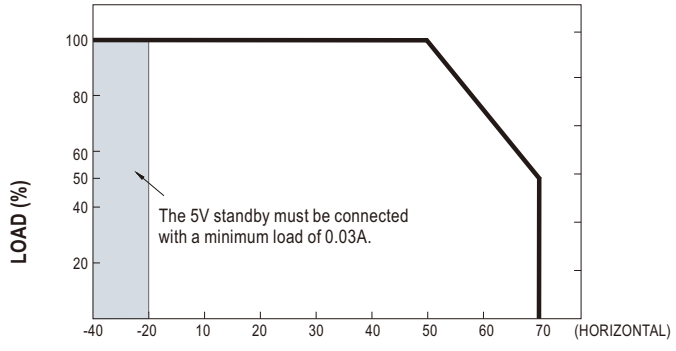

AMBIENT TEMPERATURE (℃)

■ Output Derating VS Input Voltage

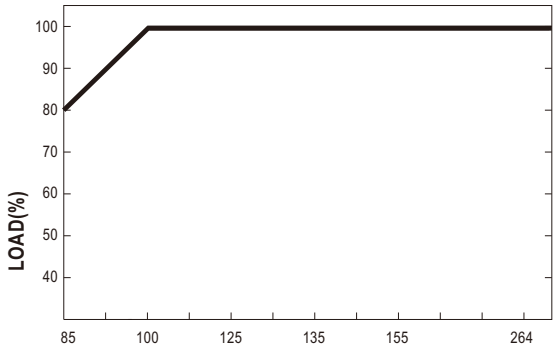

INPUT VOLTAGE (V) 60Hz

LRI Distribuída no Brasil pela LRI | vendas@lri.com.br | 51 2129-3000

■ Function Description of CN100

Pin No.	Function	Description
1	AUX	Auxiliary voltage output, 4.75~5.25V, reference to pin 2(AUXG). The maximum load current is 0.3A. This output is not controlled by the "remote ON/OFF control".
2	AUXG	Auxiliary voltage output ground. The signal return is isolated from the output terminals (+V & -V).
3	DC-OK	DC-OK signal is a TTL level signal, referenced to pin5(DC-OK GND). High when PSU turns on.
4	RC-	Remote control ground.
5	GND	This pin connects to the negative terminal(-V). Return for DC-OK signal output.
6	RC+	Turns the output on and off by electrical or dry contact between pin 4 (RC-), Short: Power OFF, Open: Power ON.
7	+S	Positive sensing. The +S signal should be connected to the positive terminal of the load. The +S and -S leads should be twisted in pair to minimize noise pick-up effect. The maximum line drop compensation is 0.5V.
8	-S	Negative sensing. The -S signal should be connected to the negative terminal of the load. The -S and +S leads should be twisted in pair to minimize noise pick-up effect. The maximum line drop compensation is 0.5V.

■ Function Manual

1.Remote Sense

The remote sensing compensates voltage drop on the load wiring up to 0.5V.

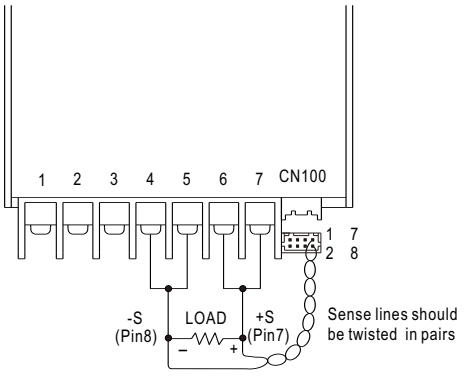

CN100

1	AUX	DC-OK	GND	+S	7
2	AUXG	RC-	RC+	-S	8

Fig 1.1

2.DC-OK Signal

DC-OK signal is a TTL level signal. High when PSU turns on.

Between DC-OK(pin3) and GND(pin5)	Output Status
3.3 ~ 5.6V	ON
0 ~ 1V	OFF

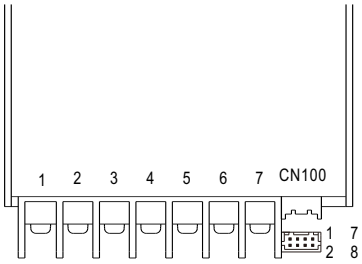

CN100

1	AUX	DC-OK	GND	+S	7
2	AUXG	RC-	RC+	-S	8

Fig 2.1

LRI Distribuída no Brasil pela LRI | vendas@lri.com.br | 51 2129-3000

3.Remote Control

The PSU can be turned ON/OFF by using the "Remote ON/OFF" function

Between RC+(pin6) and RC-(pin4)	Output Status
SW ON (Short)	OFF
SW OFF (Open)	ON

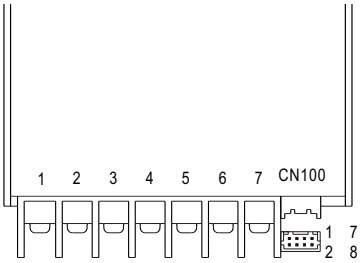

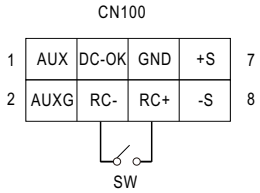

Fig 3.1

Distribuída no Brasil pela LRI | vendas@lri.com.br | 51 2129-3000