HRPG-200 series

200W Single Output with PFC Function

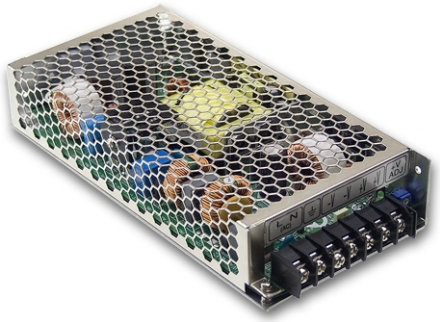

Features :

- Universal AC input / Full range
- Built-in active PFC function, PF>0.95
- High efficiency up to 89%
- Withstand 300VAC surge input for 5 seconds
- Protections: Short circuit / Overload / Over voltage / Over temperature
- Cooling by free air convection
- Built-in constant current limiting circuit
- 1U low profile 38mm
- Built-in remote ON-OFF control
- Standby 5V@0.3A
- Built-in remote sense function
- No load power consumption<0.5W (Note.6)
- 5 years warranty

User's Manual
Click Me

GTIN CODE

MW Search: https://www.meanwell.com/serviceGTIN.aspx

UL62368-1 BS EN/EN62368-1 TPTC004 IEC62368-1

SPECIFICATION

MODEL		HRPG-200-3.3	HRPG-200-5	HRPG-200-7.5	HRPG-200-12	HRPG-200-15	HRPG-200-24	HRPG-200-36	HRPG-200-48
OUTPUT	DC VOLTAGE	3.3V	5V	7.5V	12V	15V	24V	36V	48V
	RATED CURRENT	40A	35A	26.7A	16.7A	13.4A	8.4A	5.7A	4.3A
	CURRENT RANGE	0 ~ 40A	0 ~ 35A	0 ~ 26.7A	0 ~ 16.7A	0 ~ 13.4A	0 ~ 8.4A	0 ~ 5.7A	0 ~ 4.3A
	RATED POWER	132W	175W	200.3W	200.4W	201W	201.6W	205.2W	206.4W
	RIPPLE & NOISE (max.) Note.2	80mVp-p	90mVp-p	100mVp-p	120mVp-p	150mVp-p	150mVp-p	250mVp-p	250mVp-p
	VOLTAGE ADJ. RANGE	2.8 ~ 3.8V	4.3 ~ 5.8V	6.8 ~ 9V	10.2 ~ 13.8V	13.5 ~ 18V	21.6 ~ 28.8V	28.8 ~ 39.6V	40.8 ~ 55.2V
	VOLTAGE TOLERANCE Note.3	±2.0%	±2.0%	±2.0%	±1.0%	±1.0%	±1.0%	±1.0%	±1.0%
	LINE REGULATION	±0.5%	±0.5%	±0.5%	±0.3%	±0.3%	±0.2%	±0.2%	±0.2%
	LOAD REGULATION	±1.5%	±1.0%	±1.0%	±0.5%	±0.5%	±0.5%	±0.5%	±0.5%
	SETUP, RISE TIME	1000ms, 50ms/230VAC 2500ms, 50ms/115VAC at full load							
	HOLD UP TIME (Typ.)	16ms/230VAC 16ms/115VAC at full load							
INPUT	VOLTAGE RANGE Note.5	85 ~ 264VAC 120 ~ 370VDC							
	FREQUENCY RANGE	47 ~ 63Hz							
	POWER FACTOR (Typ.)	PF>0.95/230VAC PF>0.99/115VAC at full load							
	EFFICIENCY (Typ.)	80%	84%	86%	88%	88%	88%	89%	89%
	AC CURRENT (Typ.)	2.1A/115VAC 1.1A/230VAC							
	INRUSH CURRENT (Typ.)	35A/115VAC 70A/230VAC							
	LEAKAGE CURRENT	<1.2mA / 240VAC							
PROTECTION	OVERLOAD	105 ~ 135% rated output power							
		Protection type : Constant current limiting, recovers automatically after fault condition is removed							
	OVER VOLTAGE	3.96 ~ 4.62V	6 ~ 7V	9.4 ~ 10.9V	14.4 ~ 16.8V	18.8 ~ 21.8V	30 ~ 34.8V	41.4 ~ 48.6V	57.6 ~ 67.2V
		Protection type : Shut down o/p voltage, re-power on to recover							
	OVER TEMPERATURE	Shut down o/p voltage, recovers automatically after temperature goes down							
FUNCTION	5V STANDBY	5VSB : 5V@0.3A ; tolerance±5%, ripple : 50mVp-p(max.)							
	REMOTE CONTROL	RC+/RC- : 4 ~10V or open = power on ; 0 ~ 0.8V or short = power off							
ENVIRONMENT	WORKING TEMP.	-40 ~ +70℃ (Refer to "Derating Curve")							
	WORKING HUMIDITY	20 ~ 90% RH non-condensing							
	STORAGE TEMP., HUMIDITY	-40 ~ +85℃, 10 ~ 95% RH							
	TEMP. COEFFICIENT	±0.03%/℃ (0 ~ 50℃)							
	VIBRATION	10 ~ 500Hz, 5G 10min./1cycle, 60min. each along X, Y, Z axes							
SAFETY & EMC (Note 4)	SAFETY STANDARDS	UL62368-1, TUV BS EN/EN62368-1, EAC TP TC 004 approved							
	WITHSTAND VOLTAGE	I/P-O/P:3KVAC I/P-FG:2KVAC O/P-FG:0.5KVAC							
	ISOLATION RESISTANCE	I/P-O/P, I/P-FG, O/P-FG:100M Ohms / 500VDC / 25℃/ 70% RH							
	EMC EMISSION	Compliance to BS EN/EN55032 (CISPR32) Class B, BS EN/EN61000-3-2,-3, EAC TP TC 020							
	EMC IMMUNITY	Compliance to BS EN/EN61000-4-2,3,4,5,6,8,11, BS EN/EN55035, heavy industry level, EAC TP TC 020							
OTHERS	MTBF	1612.1K hrs min. Telcordia SR-332 (Bellcore) ; 189.1K hrs min. MIL-HDBK-217F (25℃)							
	DIMENSION	199*98*38mm (L*W*H)							
	PACKING	0.77Kg; 18pcs/14.9Kg/0.87CUFT							

NOTE

1. All parameters NOT specially mentioned are measured at 230VAC input, rated load and 25℃ of ambient temperature.
2. Ripple & noise are measured at 20MHz of bandwidth by using a 12" twisted pair-wire terminated with a 0.1 μF & 47 μF parallel capacitor.
3. Tolerance : includes set up tolerance, line regulation and load regulation.
4. The power supply is considered a component which will be installed into a final equipment. All the EMC tests are been executed by mounting the unit on a 360mm*360mm metal plate with 1mm of thickness. The final equipment must be re-confirmed that it still meets EMC directives. For guidance on how to perform these EMC tests, please refer to "EMI testing of component power supplies." (as available on https://www.meanwell.com//Upload/PDF/EMI_statement_en.pdf)
5. Derating may be needed under low input voltages. Please check the derating curve for more details.
6. No load power consumption<0.5W when RC+ & RC- (CN100 pin1,2) 0 ~ 0.8V or short.
7. The ambient temperature derating of 3.5℃/1000m with fanless models and of 5℃/1000m with fan models for operating altitude higher than 2000m(6500ft).

※ Product Liability Disclaimer : For detailed information, please refer to https://www.meanwell.com/serviceDisclaimer.aspx

LRI Distribuída no Brasil pela LRI | vendas@lri.com.br | 51 2129-3000

■ Mechanical Specification

(Unit: mm , tolerance ± 1mm)

Case No.902E

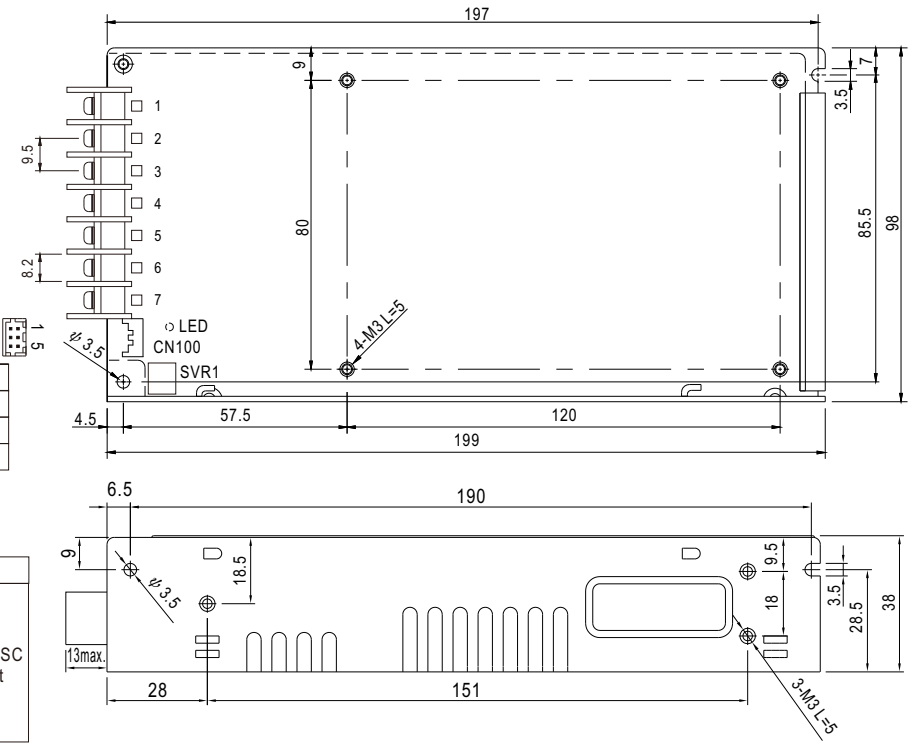

Terminal Pin No. Assignment

Pin No.	Assignment	Pin No.	Assignment
1	AC/L	4,5	DC OUTPUT -V
2	AC/N	6,7	DC OUTPUT +V
3	FG ⏚		

Connector Pin No. Assignment (CN100) :
HRS DF11-6DP-2DS or equivalent

Pin No.	Assignment	Mating Housing	Terminal
1	RC+	HRS DF11-6DS or equivalent	HRS DF11-**SC or equivalent
2	RC-		
3	AUX		
4	AUXG		
5	+S		
6	-S		

■ Block Diagram

PWM fosc :70KHz

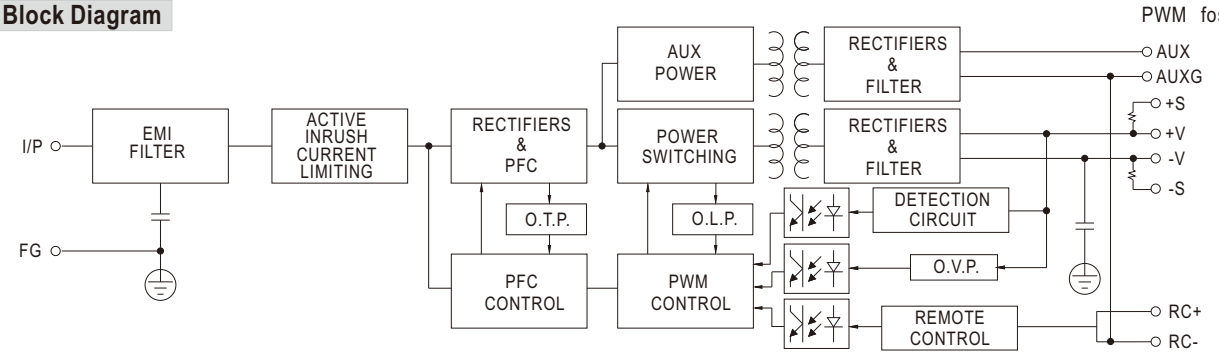

■ Derating Curve

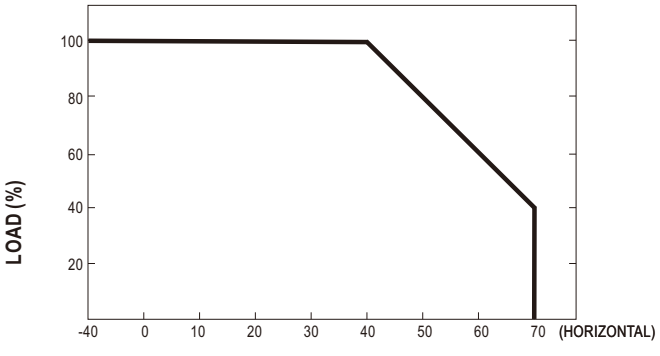

AMBIENT TEMPERATURE (℃)

■ Output Derating VS Input Voltage

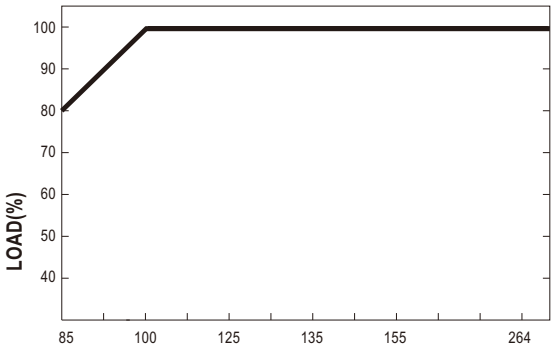

INPUT VOLTAGE (V) 60Hz

LRI Distribuída no Brasil pela LRI | vendas@lri.com.br | 51 2129-3000

■ Function Description of CN100

Pin No.	Function	Description
1	RC+	Turns the output on and off by electrical or dry contact between pin 2 (RC-). Short: Power OFF, Open: Power ON.
2	RC-	Remote control ground.
3	AUX	Auxiliary voltage output, 4.75~5.25V, reference to pin 4(AUXG). The maximum load current is 0.3A. This output is not controlled by the "remote ON/OFF control".
4	AUXG	Auxiliary voltage output ground. The signal return is isolated from the output terminals (+V & -V).
5	+S	Positive sensing. The +S signal should be connected to the positive terminal of the load. The +S and -S leads should be twisted in pair to minimize noise pick-up effect. The maximum line drop compensation is 0.5V.
6	-S	Negative sensing. The -S signal should be connected to the negative terminal of the load. The -S and +S leads should be twisted in pair to minimize noise pick-up effect. The maximum line drop compensation is 0.5V.

■ Function Manual

1.Remote Control

The PSU can be turned ON/OFF by using the "Remote ON/OFF" function

Between RC-(pin2) and RC+(pin1)	Output Status
SW ON (Short)	OFF
SW OFF (Open)	ON

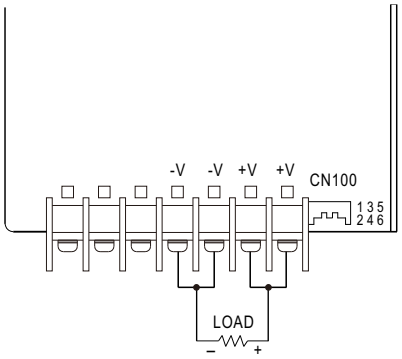

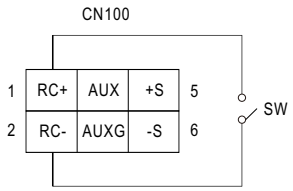

Fig 1.1

2.Remote Sense

The remote sensing compensates voltage drop on the load wiring up to 0.5V.

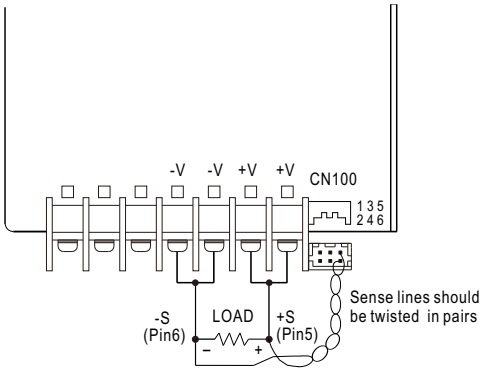

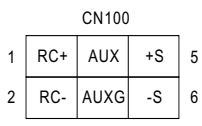

Fig 2.1

LRI Distribuída no Brasil pela LRI | vendas@lri.com.br | 51 2129-3000