MEAN WELL

1000W Single Output with PFC Function

HRPG-1000 series

User's Manual



UL62368-1 BS EN/EN62368-1 GB4943.1 TPTC004 IEC62368-1

Automate Industrial Security Network Telecom

Features

- Universal AC input / Full range
- Built-in active PFC function, PF>0.95
- High efficiency up to 94%
- Withstand 300VAC surge input for 5 seconds
- Protections: Short circuit / Overload / Over voltage / Over temperature
- Built-in cooling fan ON-OFF control
- Current sharing up to 4000W (3+1)
- Built-in DC OK signal
- Built-in remote ON-OFF control
- Standby 5V@0.3A
- Built-in remote sense function
- No load power consumption<0.75W (Note.6)
- 5 years warranty

Applications

- Factory control or automation apparatus
- Test and measurement instrument
- Laser related machine
- Aging equipment
- RF application

GTIN CODE

MW Search: https://www.meanwell.com/serviceGTIN.aspx

Description

HRPG-1000 is a single output enclosed type AC/DC power supply providing 1000 W output power for a wide range of industrial applications. This series operates for 90~264 VAC input voltage and offers models with different rated voltage ranging between 12 and 48 V that can satisfy the demands for all kinds of industrial equipments. Each model is cooled by the built-in fan with speed control, working for the temperature up to 70℃. Moreover, HRPG-1000 has various built-in functions such as auxiliary power, remote sense and remote on-off control, offering vast design flexibility for industrial application.

Model Encoding / Order Information

HRPG - 1000 - 12

- 12 — Output voltage
- 1000 — Output wattage
- HRPG — Series name

LRI Distribuída no Brasil pela LRI | vendas@lri.com.br | 51 2129-3000

Mean Well Brasil

SPECIFICATION

MODEL		HRPG-1000-12	HRPG-1000-15	HRPG-1000-24	HRPG-1000-48
OUTPUT	DC VOLTAGE	12V	15V	24V	48V
	RATED CURRENT	80A	64A	42A	21A
	CURRENT RANGE	0 ~ 80A	0 ~ 64A	0 ~ 42A	0 ~ 21A
	RATED POWER	960W (max. 1000W for 3 sec.)	960W (max. 1000W for 3 sec.)	1008W	1008W
	RIPPLE & NOISE (max.) Note.2	150mVp-p	150mVp-p	200mVp-p	250mVp-p
	VOLTAGE ADJ. RANGE	11 ~ 14V	14 ~ 17V	22 ~ 28V	46 ~ 56V
	VOLTAGE TOLERANCE Note.3	±2.0%	±1.5%	±1.0%	±1.0%
	LINE REGULATION	±0.5%	±0.5%	±0.5%	±0.5%
	LOAD REGULATION	±2.0%	±1.5%	±0.5%	±0.5%
	SETUP, RISE TIME	1000ms, 50ms/230VAC 2000ms, 50ms/115VAC at full load			
	HOLD UP TIME (Typ.)	16ms/230VAC 16ms/115VAC at full load			
INPUT	VOLTAGE RANGE Note.4	90 ~ 264VAC(300VAC for 5 sec.) 127 ~ 370VDC			
	FREQUENCY RANGE	47 ~ 63Hz			
	POWER FACTOR (Typ.)	PF>0.95/230VAC PF>0.99/115VAC at full load			
	EFFICIENCY (Typ.)	91.5%	92%	93%	94%
	AC CURRENT (Typ.)	8.5A/115VAC 5A/230VAC			
	INRUSH CURRENT (Typ.)	25A/115VAC 40A/230VAC			
	LEAKAGE CURRENT	<1.2mA / 240VAC			
PROTECTION	OVERLOAD	105 ~ 135% rated output power			
		Protection type : Constant current limiting, recovers automatically after fault condition is removed			
	OVER VOLTAGE	14.5 ~ 16.5V	18.2 ~ 20.6V	29 ~ 33V	58 ~ 65V
		Protection type : Shut down o/p voltage, re-power on to recover			
	OVER TEMPERATURE	Shut down o/p voltage, recovers automatically after temperature goes down			
FUNCTION	CURRENT SHARING	Up to 4000W or (3+1) units. Please refer to the Function Manual.			
	REMOTE ON-OFF CONTROL	Power ON : short; Power OFF : open. Please refer to the Function Manual.			
	REMOTE SENSE	Compensate voltage drop on the load wiring up to 0.5V. Please refer to the Function Manual.			
	DC-OK SIGNAL	The TTL signal out, PSU turn on = 3.3 ~ 5.6V ; PSU turn off = 0 ~ 1V. Please refer to the Function Manual.			
	5V STANDBY	5VSB : 5V@0.3A ; tolerance±5%, ripple : 50mVp-p(max.)			
	FAN CONTROL	Fan on/off by NTC(RT50) or 30% load min.			
ENVIRONMENT	WORKING TEMP.	-40 ~ +70℃ (Refer to "Derating Curve")			
	WORKING HUMIDITY	20 ~ 90% RH non-condensing			
	STORAGE TEMP., HUMIDITY	-40 ~ +85℃, 10 ~ 95% RH non-condensing			
	TEMP. COEFFICIENT	±0.03%/℃ (0 ~ 50℃)			
	VIBRATION	10 ~ 500Hz, 5G 10min./1cycle, 60min. each along X, Y, Z axes			
SAFETY & EMC (Note 7)	SAFETY STANDARDS	UL62368-1, CAN/CSA C22.2 No. 62368-1, TUV BS EN/EN62368-1, AS/NZS62368.1, CCC GB4943.1-2022, EAC TP TC 004 approved			
	WITHSTAND VOLTAGE	I/P-O/P:3KVAC I/P-FG:2KVAC O/P-FG:0.5KVAC			
	ISOLATION RESISTANCE	I/P-O/P, I/P-FG, O/P-FG:100M Ohms / 500VDC / 25℃/ 70% RH			
	EMC EMISSION	**Parameter**	**Standard**	**Test Level / Note**	
		Conducted	BS EN/EN55032 (CISPR32)	Class B	
		Radiated	BS EN/EN55032 (CISPR32)	Class B	
		Harmonic Current	BS EN/EN61000-3-2	Class A	
		Voltage Flicker	BS EN/EN61000-3-3	-----	
	EMC IMMUNITY	BS EN/EN55035, BS EN/EN61000-6-2			
		Parameter	**Standard**	**Test Level / Note**	
		ESD	BS EN/EN61000-4-2	Level 3, 8KV air ; Level 2, 4KV contact	
		Radiated	BS EN/EN61000-4-3	Level 3	
		EFT / Burst	BS EN/EN61000-4-4	Level 3	
		Surge	BS EN/EN61000-4-5	Level 4, 2KV/Line-Line 4KV/Line-Earth	
		Conducted	BS EN/EN61000-4-6	Level 3	
		Magnetic Field	BS EN/EN61000-4-8	Level 4	
		Voltage Dips and Interruptions	BS EN/EN61000-4-11	>95% dip 0.5 periods, 30% dip 25 periods, >95% interruptions 250 periods	
OTHERS	MTBF	862.1K hrs min. Telcordia SR-332 (Bellcore) ; 105.9K hrs min. MIL-HDBK-217F (25℃)			
	DIMENSION	218*105*63.5mm (L*W*H)			
	PACKING	1.53Kg;8pcs/13.3Kg/1.34CUFT			

NOTE

1. All parameters NOT specially mentioned are measured at 230VAC input, rated load and 25℃ of ambient temperature.
2. Ripple & noise are measured at 20MHz of bandwidth by using a 12" twisted pair-wire terminated with a 0.1uf & 47uf parallel capacitor.
3. Tolerance : includes set up tolerance, line regulation and load regulation.
4. Derating may be needed under low input voltages. Please check the derating curve for more details.
5. Length of set up time is measured at first cold start. Turning ON/OFF the power supply may lead to increase of the set up time.
6. No load power consumption<0.75W when RC+ & RC- (CN100 pin3,4) open.
7. The power supply is considered a component which will be installed into a final equipment. All the EMC tests are been executed by mounting the unit on a 360mm*700mm metal plate with 1mm of thickness. The final equipment must be re-confirmed that it still meets EMC directives. For guidance on how to perform these EMC tests, please refer to "EMI testing of component power supplies." (as available on https://www.meanwell.com//Upload/PDF/EMI_statement_en.pdf)
8. The ambient temperature derating of 3.5℃/1000m with fanless models and of 5℃/1000m with fan models for operating altitude higher than 2000m(6500ft).

※ Product Liability Disclaimer : For detailed information, please refer to https://www.meanwell.com/serviceDisclaimer.aspx

LRI Distribuída no Brasil pela LRI | vendas@lri.com.br | 51 2129-3000

■ Block Diagram

PFC : 65KHz
PWM : 90KHz

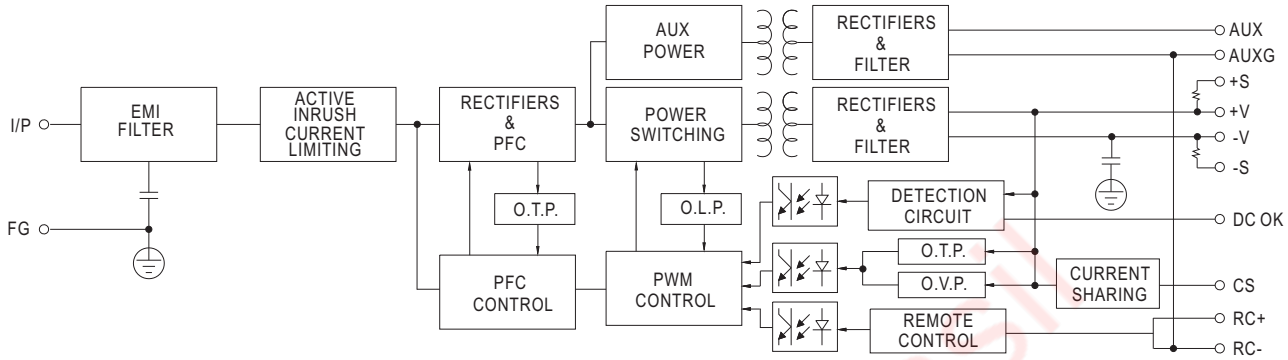

■ Derating Curve

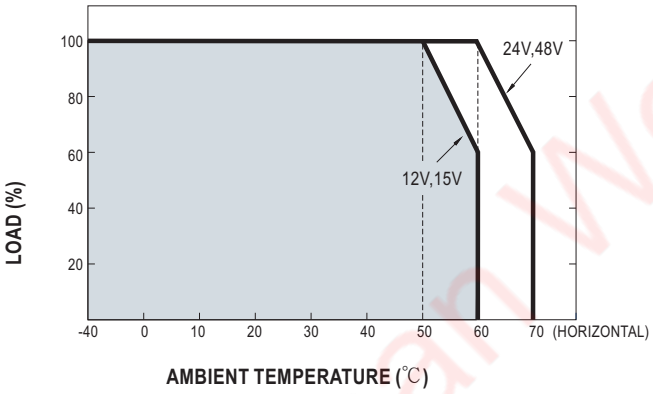

■ Output Derating VS Input Voltage

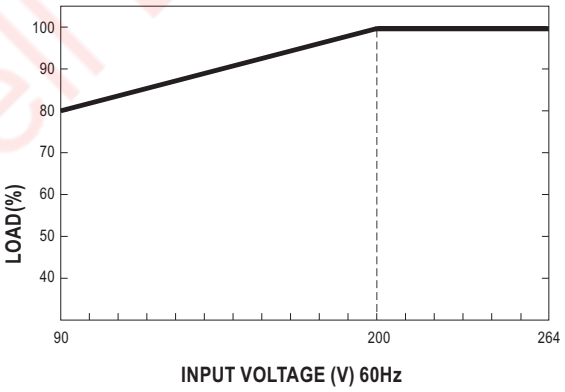

Mean Well Brasil

LRI Distribuída no Brasil pela LRI | vendas@lri.com.br | 51 2129-3000

■ Function Description of CN100

Pin No.	Function	Description
1	AUXG	Auxiliary voltage output ground.
2	AUX	Auxiliary voltage output, 4.75~5.25V, referenced to pin 1(AUXG). The maximum load current is 0.3A. This output is not controlled by the "remote ON/OFF control".
3	RC+	Turns the output on and off by electrical or dry contact between pin 4 (RC-), Short: Power ON, Open: Power OFF.
4	RC-	Remote control ground.
5	CS	Current sharing signal. When units are connected in parallel, the CS pins of the units should be connected to allow current balance between units.
6,8	GND	This pin connects to the negative terminal(-V). Return for DC-OK signal output.
7	DC-OK	DC-OK signal is a TTL level signal, referenced to pin8(DC-OK GND). High when PSU turns on.
9	+S	Positive sensing. The +S signal should be connected to the positive terminal of the load. The +S and -S leads should be twisted in pair to minimize noise pick-up effect. The maximum line drop compensation is 0.5V.
10	-S	Negative sensing. The -S signal should be connected to the negative terminal of the load. The -S and +S leads should be twisted in pair to minimize noise pick-up effect. The maximum line drop compensation is 0.5V.

■ Function Manual

1.Remote Sense

The remote sensing compensates voltage drop on the load wiring up to 0.5V.

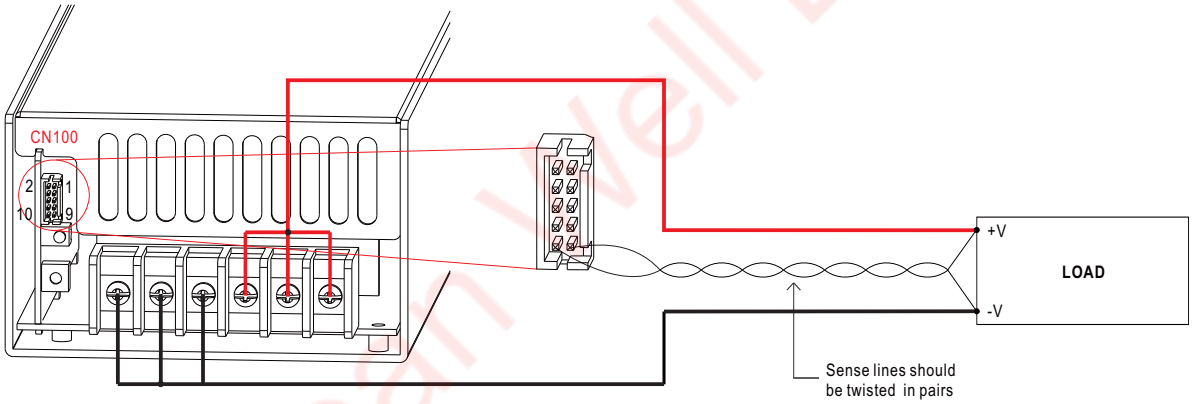

Fig 1.1

2.DC-OK Signal

DC-OK signal is a TTL level signal. High when PSU turns on.

Between DC-OK(pin7) and GND(pin6,8)	Output Status
3.3 ~ 5.6V	ON
0 ~ 1V	OFF

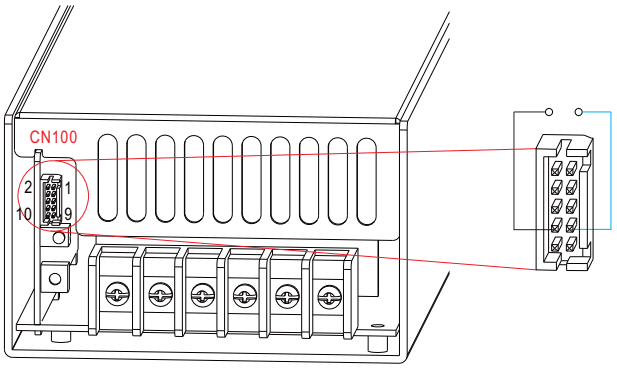

Fig 2.1

Distribuída no Brasil pela LRI | vendas@lri.com.br | 51 2129-3000

3.Remote ON-OFF Control

The PSU can be turned ON/OFF by using the "Remote Control" function.

Between RC+(pin3) and RC-(pin4)	Output Status
SW ON (Short)	ON
SW OFF (Open)	OFF

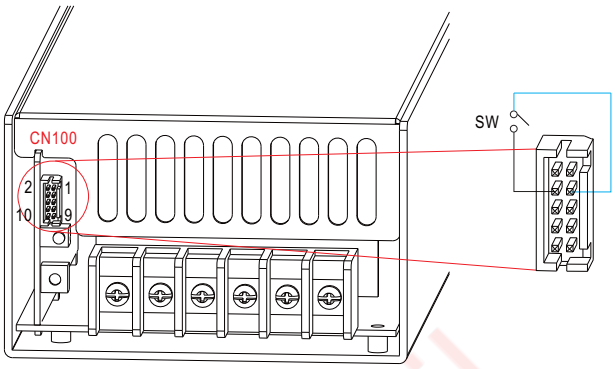

Fig 3.1

4.Current Sharing

HRPG-1000 has the built-in active current sharing function and can be connected in parallel, up to 4 units, to provide higher output power as exhibited below :

※The power supplies should be paralleled using short and large diameter wiring and then connected to the load.

※ Difference of output voltages among parallel units should be less than 0.2V.

※ The total output current must not exceed the value determined by the following equation:

Maximum output current at parallel operation=(Rated current per unit)×(Number of unit)×0.9

※ When the total output current is less than 5% of the total rated current, or say (5% of Rated current per unit)×(Number of unit) the current shared among units may not be fully balanced.

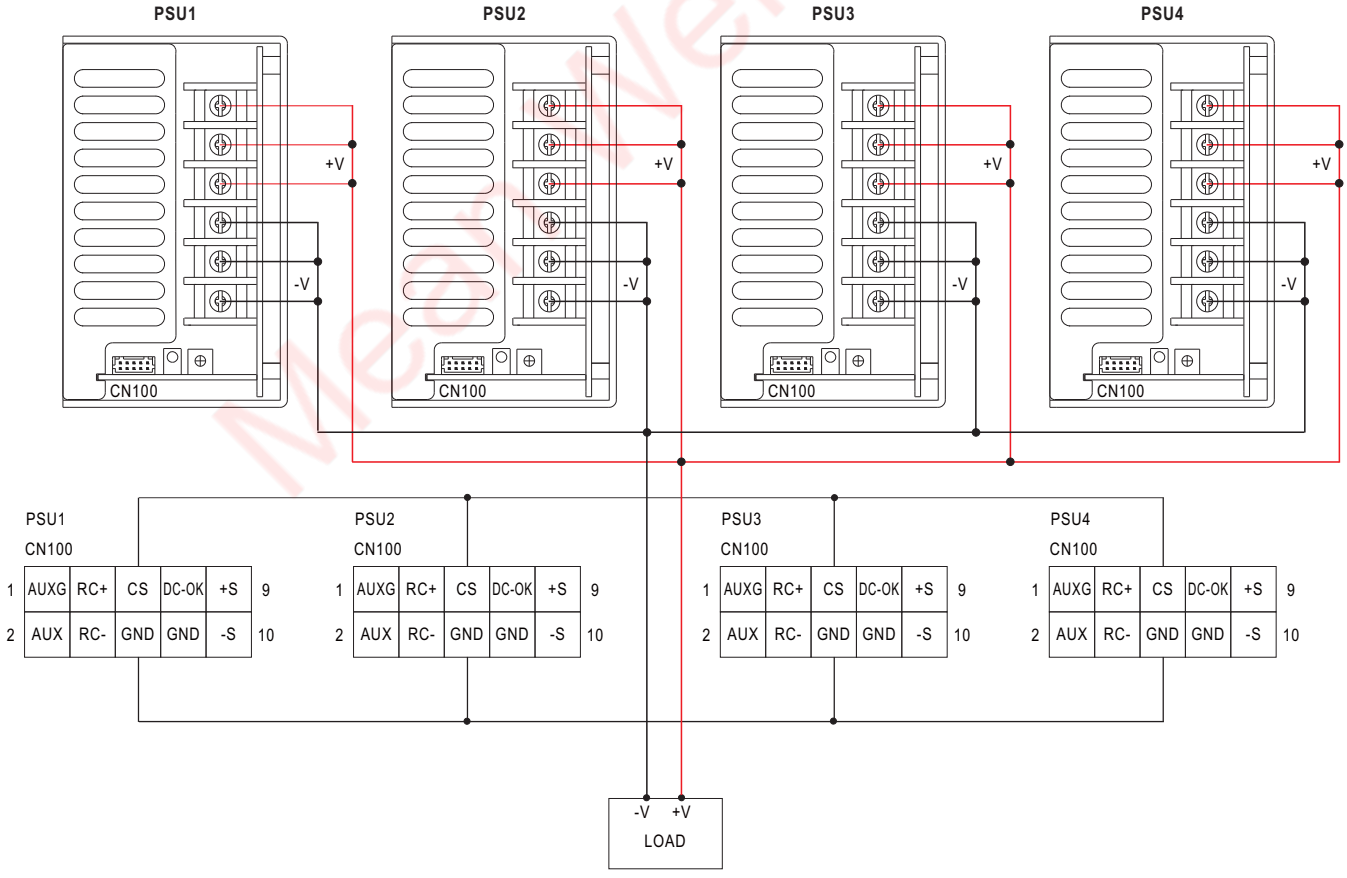

Fig 4.1

Mean Well Brasil

LRI Distribuída no Brasil pela LRI | vendas@lri.com.br | 51 2129-3000

■ Mechanical Specification

Case No. 977 Unit:mm

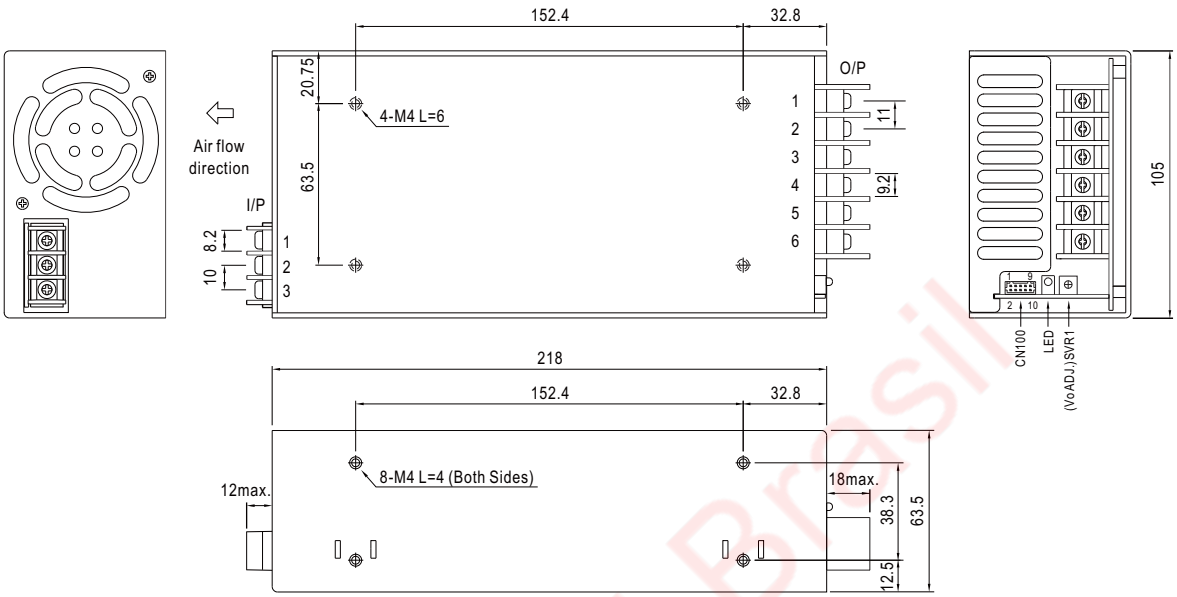

AC Input Terminal Pin No. Assignment

Pin No.	Assignment
1	AC/L
2	AC/N
3	FG ⏚

DC Output Terminal Pin No. Assignment

Pin No.	Assignment
1~3	+V
4~6	-V

Connector Pin No. Assignment(CN100) : HRS DF11-10DP-2DS or equivalent

Pin No.	Assignment	Pin No.	Assignment	Mating Housing	Terminal
1	AUXG	6,8	GND	HRS DF11-10DS or equivalent	HRS DF11-**SC or equivalent
2	AUX	7	DC-OK		
3	RC+	9	+S		
4	RC-	10	-S		
5	CS				

■ Installation Manual

Please refer to : http://www.meanwell.com/manual.html

Mean Well Brasil

LRI Distribuída no Brasil pela LRI | vendas@lri.com.br | 51 2129-3000