HEP-600C series

600W Battery Charger for Harsh Environment

User's Manual
Click Me



UL62368-1 BS EN/EN62368-1 TPTC004 IEC62368-1

Household Automate Industrial Security Network Telecom

Features

- Charger for lead-acid batteries (flooded, Gel and AGM) and Li-ion batteries (lithium iron and lithium manganese) (Note.1)
- 3 stage charging
- Universal AC input / Full range
- Built-in active PFC function
- No load power consumption <0.5W at remote OFF
- High efficiency up to 95.5%
- Fanless design, cooling by free air convection
- Aluminum case and filling with heat-conducted glue
- Withstand 10G vibration test
- -40 ~ +70℃ wide operating range
- Output voltage and output current can be adjusted through internal potentiometer
- Protection: Short circuit / Over voltage / Over temperature
- 3 color LED loading indicator
- Operating altitude up to 5000 meters (Note.5)
- 6 years warranty

Applications

- Suitable for battery charger at harsh environment
- Robotic lawn mower
- Electronic transportation vehicle
- Recreational craft, personal yacht or workboat
- Security network and system
- Telecommunication base station
- Equipments or instruments with back-up battery

GTIN CODE

MW Search: https://www.meanwell.com/serviceGTIN.aspx

Description

HEP-600C series is an AC-to-DC battery charger providing up to 600W, designed with aluminum case and fully potted by silicone. It features the high efficiency (up to 95.5%), waterproof and low no-load power consumption (<0.5W) at remote OFF. Incorporating state of the art design, the fan-less HEP-600C is capable of working under high-vibration (10G), dusty, humid, and oily environment. Other features include adjustable voltage/current and wide working temperature range (-40~+70℃).

Model Encoding

HEP - 600C - 12

- 12 — Output voltage
- 600C — Battery charger
- HEP — Output wattage
- HEP-600C — Series name

Distribuída no Brasil pela LRI | vendas@lri.com.br | 51 2129-3000

SPECIFICATION

MODEL		HEP-600C-12	HEP-600C-24	HEP-600C-48
OUTPUT	BOOST CHARGE VOLTAGE Vboost	14.4V	28.8V	57.6V
	FLOAT CHARGE VOLTAGE Vfloat	13.6V	27.2V	54.4V
	VOLTAGE ADJ. RANGE	11.5 ~ 15.1V	23 ~ 30.2V	46.1 ~ 60.5V
	CURRENT ADJ. RANGE	17.5 ~ 35A	10.5 ~ 21A	5.2 ~ 10.5A
	RECOMMENDED BATTERY CAPACITY(AMP HOURS)(Note 3)	135 ~ 400AH	70 ~ 210AH	35 ~ 105AH
	BATTERY TYPE	Open & Sealed Lead Acid		
	OUTPUT CURRENT	35A	21A	10.5A
INPUT	VOLTAGE RANGE	90~264VAC(277VAC operational) 128~370VDC(390VDC operational)		
	FREQUENCY RANGE	47 ~ 63Hz		
	POWER FACTOR (Typ.)	PF>0.98/115VAC, PF>0.95/230VAC, PF>0.93/277VAC at full load		
	EFFICIENCY (Typ.)	93.5%	94.5%	95.5%
	AC CURRENT (Typ.)	7A / 115VAC 3.3A / 230VAC 2.9A / 277VAC		
	INRUSH CURRENT (Typ.)	COLD START 70A(t_{width}=1010μs measured at 50% I_{peak}) at 230VAC		
	LEAKAGE CURRENT	<0.75mA / 277VAC		
PROTECTION	OVER VOLTAGE	16.5 ~ 20.5V	32.5 ~ 36.5V	68 ~ 73V
		Protection type : Shut down o/p voltage, re-power on to recover		
	OVER TEMPERATURE	Shut down o/p voltage, re-power on to recover		
FUNCTION	REMOTE ON/OFF CONTROL	Power on : "Hi" >2 ~ 5V or Open circuit Power off : "Low" <0 ~ 0.5V or Short circuit		
	5V STANDBY	$5V_{SB}$: 5V@0.5A ; tolerance ±5%, ripple : 100mVp-p(max.)		
ENVIRONMENT	WORKING TEMP.	-40 ~ +70℃ (Refer to "Derating Curve")		
	WORKING HUMIDITY	20 ~ 95% RH non-condensing		
	STORAGE TEMP., HUMIDITY	-40 ~ +85℃, 10 ~ 95% RH non-condensing		
	TEMP. COEFFICIENT	±0.05%/℃ (0 ~ 60℃)		
	VIBRATION	20 ~ 500Hz, 10G 10min./1cycle, 72min. each along X, Y, Z axes		
SAFETY & EMC (Note.4)	SAFETY STANDARDS	UL62368-1, TUV BS EN/EN62368-1, EAC TP TC 004 approved		
	WITHSTAND VOLTAGE	I/P-O/P:3.75KVAC I/P-FG:2KVAC O/P-FG:1.5KVAC		
	ISOLATION RESISTANCE	I/P-O/P, I/P-FG, O/P-FG:100M Ohms / 500VDC / 25℃/ 70% RH		
	EMC EMISSION	Compliance to BS EN/EN55032 (CISPR32), radiation class A, conduction class B, BS EN/EN61000-3-2,-3, EAC TP TC 020		
	EMC IMMUNITY	Compliance to BS EN/EN61000-4-2,3,4,5,6,8,11, BS EN/EN55024, light industry level, EAC TP TC 020		
OTHERS	MTBF	857.2K hrs min. Telcordia SR-332 (Bellcore) ; 73.1K hrs min. MIL-HDBK-217F (25℃)		
	DIMENSION	280*144*48.5mm (L*W*H)		
	PACKING	3.9Kg; 4pcs/16Kg/0.9CUFT		

NOTE

1. Modification for charger specification may be required for different battery specification. Please contact battery vendor and MEAN WELL for details.
2. All parameters NOT specially mentioned are measured at 230VAC input, rated load and 25℃ of ambient temperature.
3. This is Mean Well's suggested range. Please consult your battery manufacturer for their suggestions about maximum charging current limitation.
4. The power supply is considered a component which will be installed into a final equipment. All the EMC tests are been executed by mounting the unit on a 360mm*360mm metal plate with 1mm of thickness. The final equipment must be re-confirmed that it still meets EMC directives. For guidance on how to perform these EMC tests, please refer to “EMI testing of component power supplies.” (as available on https://www.meanwell.com//Upload/PDF/EMI_statement_en.pdf)
5. The ambient temperature derating of 3.5℃/1000m with fanless models and of 5℃/1000m with fan models for operating altitude higher than 2000m(6500ft).

※ Product Liability Disclaimer : For detailed information, please refer to https://www.meanwell.com/serviceDisclaimer.aspx

Distribuída no Brasil pela LRI | vendas@lri.com.br | 51 2129-3000

Block Diagram

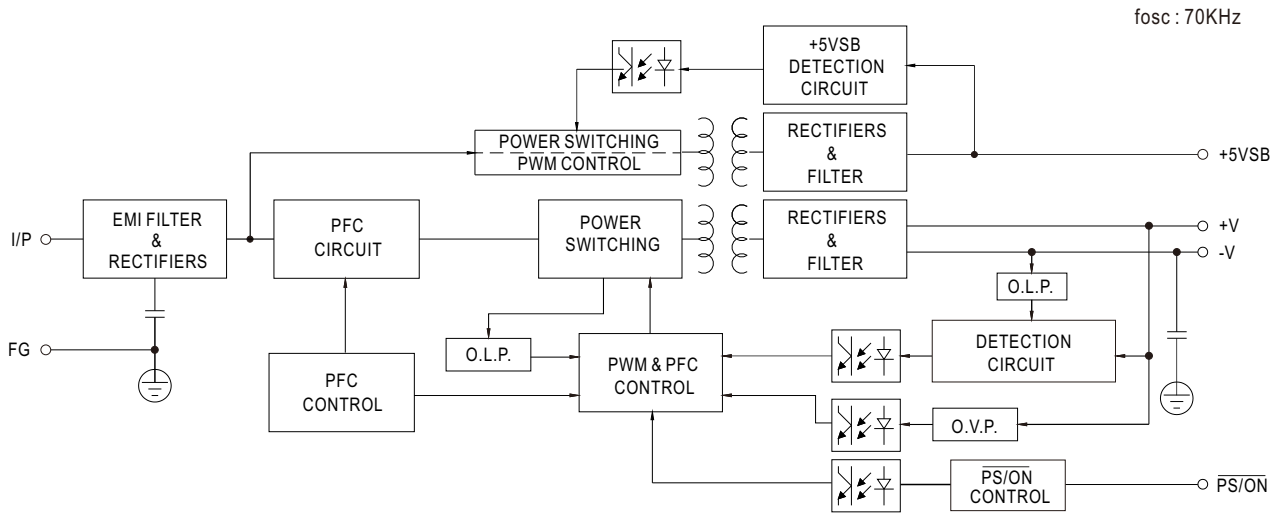

Charging Curve

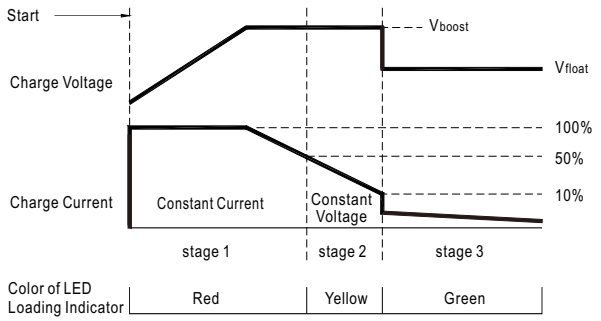

Factory default value:

State	HEP-600C-12	HEP-600C-24	HEP-600C-48
Constant Current	35A	21A	10.5A
Vboost	14.4V	28.8V	57.6V
Vfloat	13.6V	27.2V	54.4V

Derating Curve

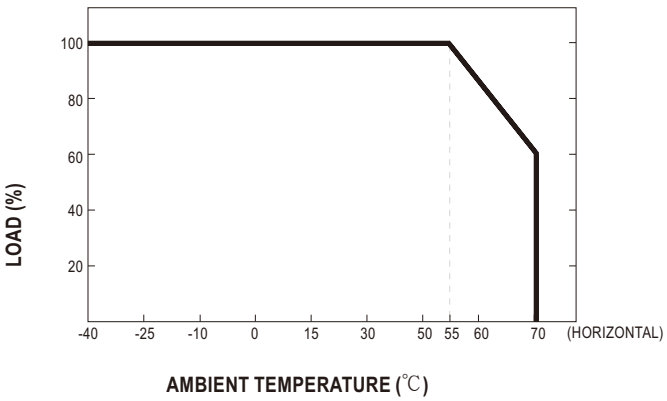

Static Characteristics

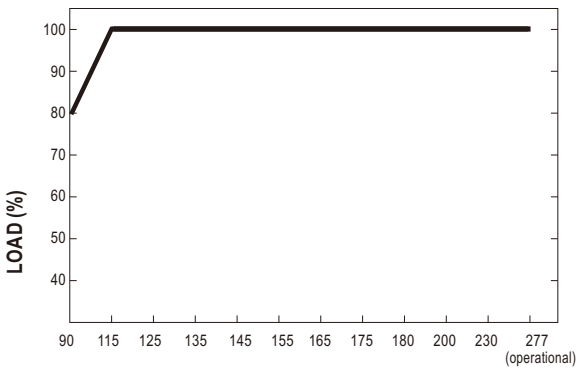

LRI Distribuída no Brasil pela LRI | vendas@lri.com.br | 51 2129-3000

■ Mechanical Specification

Case No.228A Unit:mm Tolerance:±1

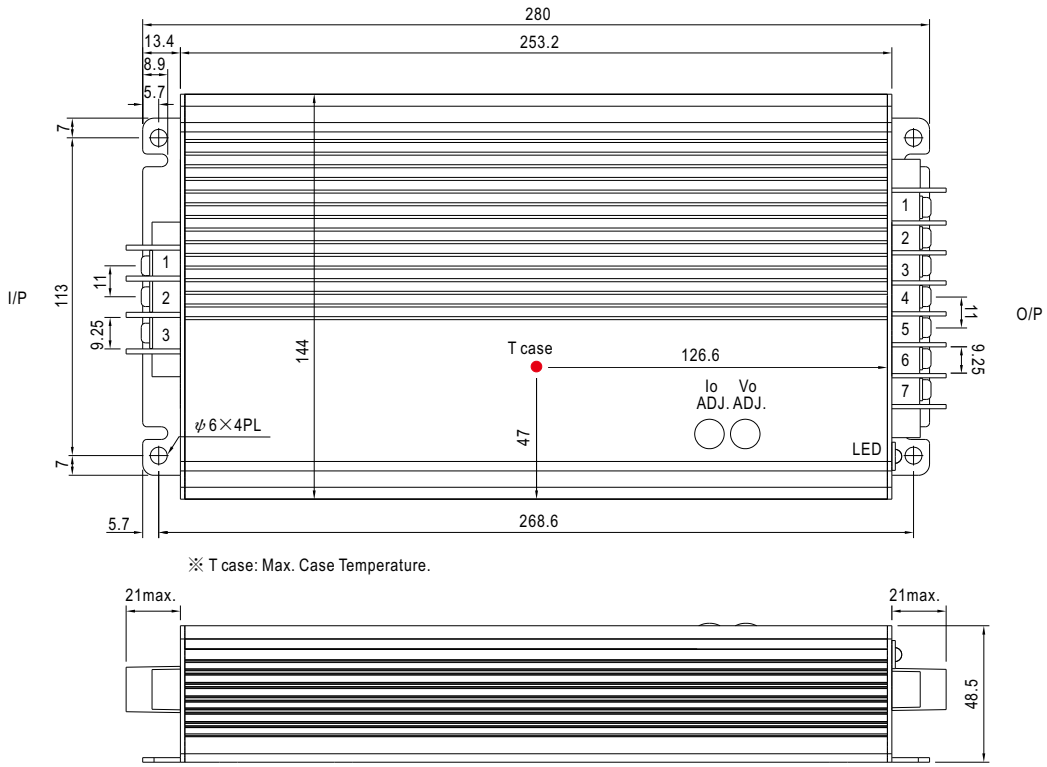

※ T case: Max. Case Temperature.

※ Output voltage and constant current level can be adjusted through internal potentiometer.
(Can access by removing the rubber stopper on the case.)

AC Input Terminal Pin No. Assignment

Pin No.	Assignment
1	FG ⏚
2	AC/L
3	AC/N

DC Output Terminal Pin No. Assignment

Pin No.	Assignment	Pin No.	Assignment
1	RC+	4,5	-V
2	RC- & GND	6,7	+V
3	$+5V_{SB}$		

Distribuída no Brasil pela LRI | vendas@lri.com.br | 51 2129-3000