108W/216W Desktop Power Supply or Charger ESC/ESP-120/240 series



Features :

- AC input range selected by switch
- Protections: Short circuit / Overload / Over voltage / Over temperature
- Battery under/Over voltage and polarity protections(ESC only)
- Forced air cooling by built-in DC fan(240W only)
- Fixed switching frequency at 25KHz
- 3 color LED loading indicator
- 2 years warranty

SPECIFICATION

MODEL		ESC/ESP-120			ESC/ESP-240		
OUTPUT	DC VOLTAGE	13.5V	27V	54V	13.5V	27V	54V
	RATED CURRENT	8A	4A	2A	16A	8A	4A
	CURRENT RANGE	0 ~ 8A	0 ~ 4A	0 ~ 2A	0 ~ 16A	0 ~ 8A	0 ~ 4A
	RATED POWER	108W	108W	108W	216W	216W	216W
	RIPPLE & NOISE (max.) Note.2	120mVp-p	150mVp-p	400mVp-p	120mVp-p	150mVp-p	400mVp-p
	VOLTAGE ADJ. RANGE	12 ~ 15V	24 ~ 30V	48 ~ 56V	12 ~ 15V	24 ~ 30V	48 ~ 56V
	VOLTAGE TOLERANCE Note.3	±2.0%	±1.0%	±1.0%	±2.0%	±1.0%	±1.0%
	LINE REGULATION	±0.5%	±0.5%	±0.5%	±1.0%	±0.5%	±0.5%
	LOAD REGULATION	±2.0%	±1.0%	±0.5%	±2.0%	±1.0%	±0.5%
	SETUP, RISE TIME	200ms, 100ms at full load			200ms, 100ms at full load		
	HOLD UP TIME (Typ.)	36ms at full load			30ms at full load		
INPUT	VOLTAGE RANGE	88 ~ 132VAC/176 ~264VAC selected by switch 249 ~ 370VDC					
	FREQUENCY RANGE	47 ~ 63Hz					
	EFFICIENCY (Typ.)	81%	83%	84%	81%	84%	85%
	AC CURRENT (Typ.)	3A/115VAC 1.5A/230VAC			4.5A/115VAC 2.5A/230VAC		
	INRUSH CURRENT (Typ.)	COLD START 40A					
	LEAKAGE CURRENT	<3.5mA / 240VAC					
PROTECTION	OVERLOAD	105 ~ 135% rated output power					
		Protection type : Fold back current limiting, recovers automatically after fault condition is removed					
	OVER VOLTAGE	15.5 ~ 18.2V	31 ~ 36.5V	62.1 ~ 72.9V	15.5 ~ 18.2V	31 ~ 36.5V	62.1 ~ 72.9V
		Protection type : Constant voltage limiting, recovers automatically after fault condition is removed					
	OVER TEMPERATURE	RTH5≧80℃ detect on heatsink of Q1,Q2 power transistor			RTH5≧85℃ detect on heatsink of Q1,Q2 power transistor		
		Protection type : Shut down o/p voltage, recovers automatically after temperature goes down					
	BATTERY	ESC series with bat. polarity, bat. Under voltage, bat. Over voltage protection					
FUNCTION	FAN CONTROL	NO FAN			RTH5≧60℃ FAN ON,≦50℃ FAN OFF		
ENVIRONMENT	WORKING TEMP.	-10 ~ +60℃ (Refer to "Derating Curve")					
	WORKING HUMIDITY	20 ~ 90% RH non-condensing					
	STORAGE TEMP., HUMIDITY	-20 ~ +85℃, 10 ~ 95% RH non-condensing					
	VIBRATION	10 ~ 500Hz, 2G 10min./1cycle, 60min. each along X, Y, Z axes					
SAFETY & EMC (Note 4)	SAFETY STANDARDS	CSA1010.1(UL3101-1,IEC1010-1,EN61010-1) approved					
	WITHSTAND VOLTAGE	I/P-O/P:3KVAC I/P-FG:1.5KVAC O/P-FG:0.5KVAC					
	ISOLATION RESISTANCE	I/P-O/P, I/P-FG, O/P-FG:100M Ohms / 500VDC / 25℃/ 70% RH					
	EMC EMISSION	Compliance to EN55032 (CISPR32) Class B, EN61000-3-2,-3					
	EMC IMMUNITY	Compliance to EN61000-4-2,3,4, light industry level, criteria A					
OTHERS	MTBF	215.8K hrs min.(ESC-120) 200.6K hrs min.(ESC-240) 250.9K Hrs min.(ESP-120) 226.6K Hrs min.(ESP-240) MIL-HDBK-217F (25℃)					
	DIMENSION	150*140*86mm (L*W*H)					
	PACKING	1.38Kg; 8pcs/12Kg/1.1CUFT(ESC-120) 1.5Kg; 8pcs/13Kg/1.1CUFT(ESC-240)					

NOTE

1. All parameters NOT specially mentioned are measured at 230VAC input, rated load and 25℃ of ambient temperature.
2. Ripple & noise are measured at 20MHz of bandwidth by using a 12" twisted pair-wire terminated with a 0.1uf & 47uf parallel capacitor.
3. Tolerance : includes set up tolerance, line regulation and load regulation.
4. The power supply is considered a component which will be installed into a final equipment. The final equipment must be re-confirmed that it still meets EMC directives. For guidance on how to perform these EMC tests, please refer to “EMI testing of component power supplies.” (as available on http://www.meanwell.com)
5. The ambient temperature derating of 3.5℃/1000m with fanless models and of 5℃/1000m with fan models for operating altitude higher than 2000m(6500ft).

Distribuída no Brasil pela LRI | vendas@lri.com.br | 51 2129-3000

■ Mechanical Specification

Case No. 909E Unit:mm

ESC/ESP-120

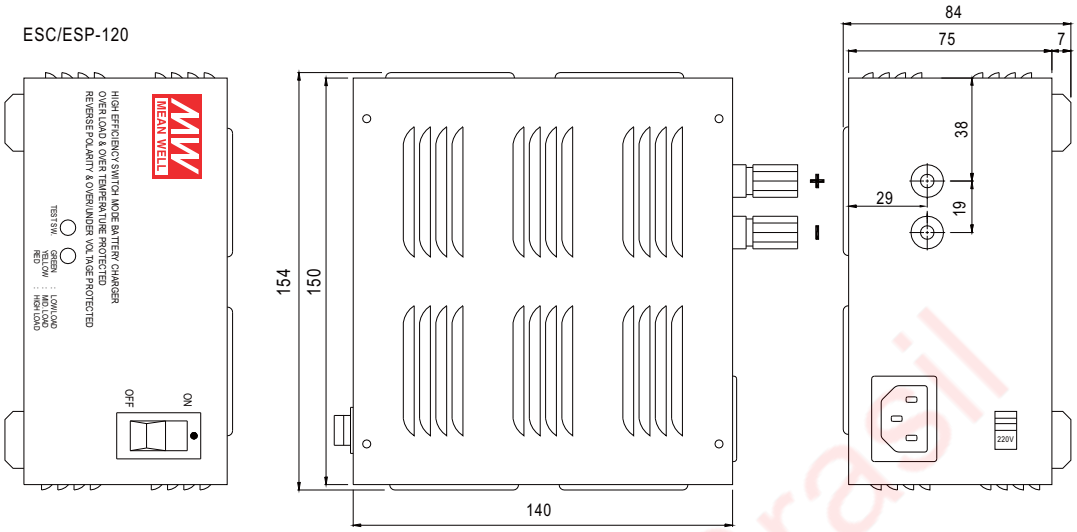

ESC/ESP-240

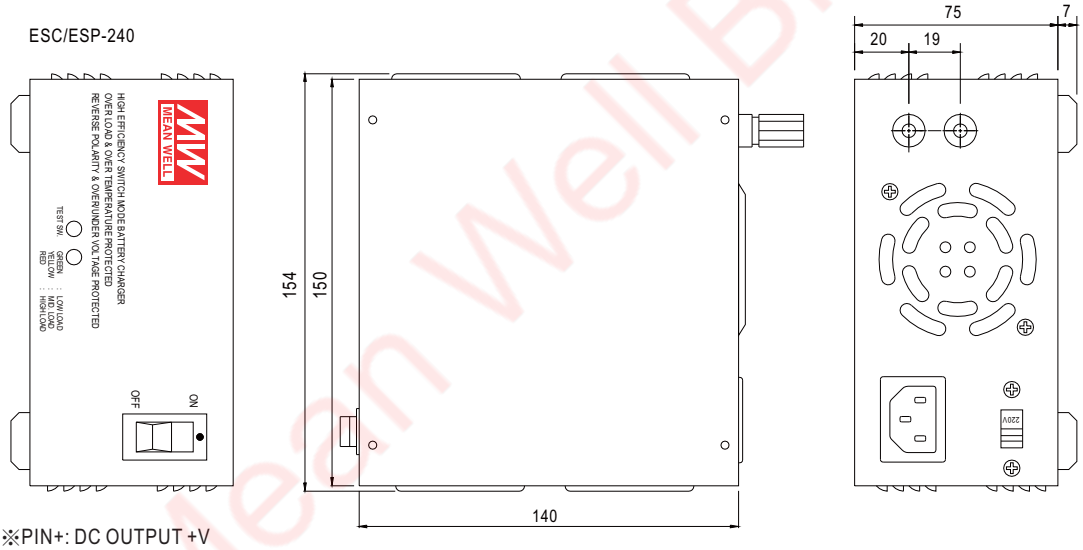

※PIN+: DC OUTPUT +V
※PIN-: DC OUTPUT COM

■ Block Diagram

fosc : 25KHz

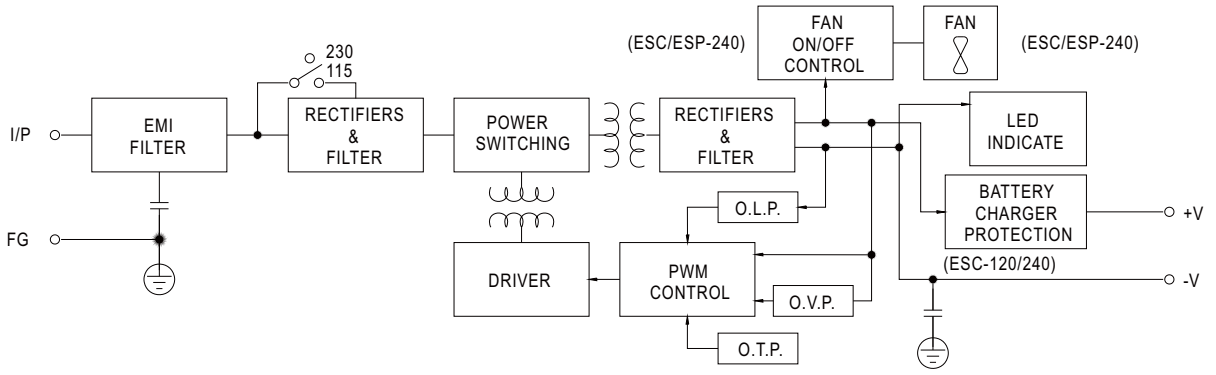

Mean Well Brasil

LRI Distribuída no Brasil pela LRI | vendas@lri.com.br | 51 2129-3000

■ Derating Curve

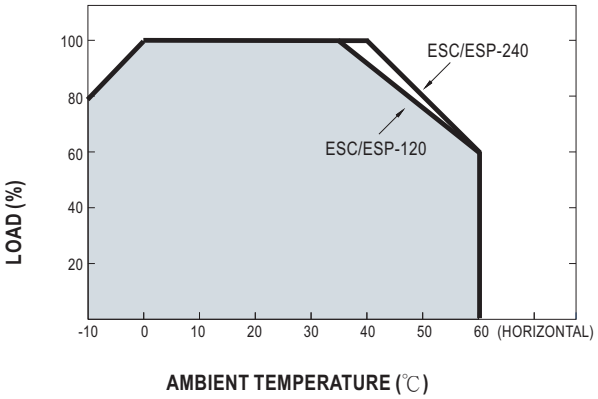

■ Static Characteristics (ESP-120-27.6)

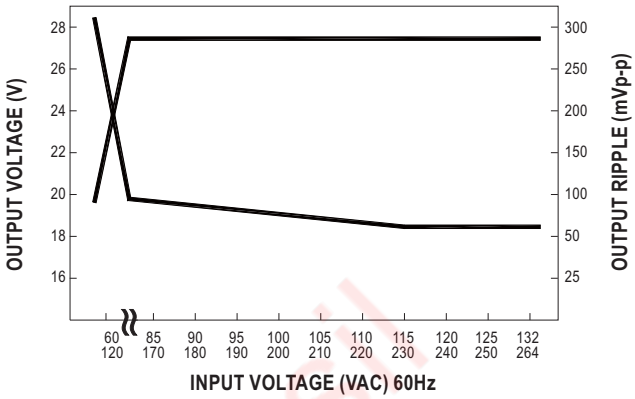

Mean Well Brasil

Distribuída no Brasil pela LRI | vendas@lri.com.br | 51 2129-3000