9~18W AC-DC Single Output Desktop

ES18B series



Features :

- Universal AC input / Full range
- 2 pole AC inlet IEC320-C8
- Class Ⅱ power (without earth pin)
- Full output 3~48V safety approval
- Protections: Short circuit / Overload / Over voltage
- Fully enclosed plastic case
- RCC control circuit and regulated
- LED indicator for power on
- Approvals: UL / CUL / TUV / CB / FCC
- 1 year warranty

SPECIFICATION

ORDER NO.		ES18B03-P1J	ES18B05-P1J	ES18B07-P1J	ES18B09-P1J	ES18B12-P1J	ES18B15-P1J	ES18B18-P1J	ES18B24-P1J	ES18B28-P1J	ES18B48-P1J
OUTPUT	SAFETY MODEL NO.	ES18B03-033	ES18B05-050	ES18B07-075	ES18B09-090	ES18B12-120	ES18B15-150	ES18B18-180	ES18B24-240	ES18B30-280	ES18B48-480
	DC VOLTAGE Note.2	3.3V	5V	7.5V	9V	12V	15V	18V	24V	28V	48V
	RATED CURRENT	2.72A	3.0A	2.0A	2.0A	1.50A	1.20A	1.0A	0.75A	0.64A	0.375A
	CURRENT RANGE	0.3 ~ 2.72A	0.3 ~ 3.0A	0.3 ~ 2.0A	0.2 ~2.0A	0.15 ~ 1.50A	0.1 ~ 1.20A	0.1 ~ 1.0A	0.1 ~ 0.75A	0.06 ~ 0.64A	0.05 ~ 0.375A
	RATED POWER (max.)	9W	15W	15W	18W	18W	18W	18W	18W	18W	18W
	RIPPLE & NOISE (max.) Note.3	50mVp-p	50mVp-p	80mVp-p	80mVp-p	80mVp-p	100mVp-p	150mVp-p	180mVp-p	240mVp-p	240mVp-p
	VOLTAGE ADJ. RANGE	Fixed									
	VOLTAGE TOLERANCE Note.4	±5.0%	±5.0%	±5.0%	±5.0%	±3.0%	±3.0%	±3.0%	±2.0%	±2.0%	±2.0%
	LINE REGULATION Note.5	±1.0%	±1.0%	±1.0%	±1.0%	±1.0%	±1.0%	±1.0%	±1.0%	±1.0%	±1.0%
	LOAD REGULATION Note.6	±5.0%	±5.0%	±5.0%	±5.0%	±3.0%	±3.0%	±3.0%	±2.0%	±2.0%	±2.0%
	SETUP, RISE, HOLD UP TIME	300ms, 100ms, 16ms at full load									
INPUT	VOLTAGE RANGE	90 ~ 264VAC 135 ~ 370VDC									
	FREQUENCY RANGE	47 ~ 63Hz									
	EFFICIENCY (Typ.)	55%	70%	72%	72%	74%	77%	78%	80%	81%	82%
	AC CURRENT	0.5A / 100VAC									
	INRUSH CURRENT (max.)	40A / 230VAC									
	LEAKAGE CURRENT(max.)	0.25mA / 240VAC									
PROTECTION	OVERLOAD	110 ~ 200% rated output power				130 ~ 350% rated output power					
		Protection type : Hiccup mode, recovers automatically after fault condition is removed									
	OVER VOLTAGE	105 ~ 135% rated output voltage									
		Protection type : Clamp by zener diode, output short									
ENVIRONMENT	WORKING TEMP.	0 ~ +50℃ (Refer to output load derating curve)									
	WORKING HUMIDITY	20% ~ 90% RH non-condensing									
	STORAGE TEMP., HUMIDITY	-20 ~ +85℃, 10 ~ 95% RH									
	TEMP. COEFFICIENT	±0.03% / ℃ (0 ~ 50℃)									
	VIBRATION	10 ~ 500Hz, 2G 10min./1cycle, period for 60min. each along X, Y, Z axes									
SAFETY & EMC (Note. 7)	SAFETY STANDARDS	UL60950-1, CSA C22.2, TUV EN60950-1 approved									
	WITHSTAND VOLTAGE	I/P-O/P:3KVAC									
	ISOLATION RESISTANCE	I/P-O/P:100M Ohms / 500VDC / 25℃/ 70% RH									
	EMI CONDUCTION & RADIATION	Compliance to EN55022 class B, FCC PART 15 / CISPR22 class B									
	HARMONIC CURRENT	Compliance to EN61000-3-2,3									
	EMS IMMUNITY	Compliance to EN61000-4-2,3,4,5,6,8,11, light industry level, criteria A									
OTHERS	MTBF	500Khrs min. MIL-HDBK-217F(25℃)									
	DIMENSION	79*54*33mm (L*W*H)									
	PACKING	220g ; 60pcs / 13.5kg / CARTON									
CONNECTOR	PLUG	Standard type P1J: 2.1ϕ * 5.5ϕ * 11mm, tuning fork type, center positive for stock ; Other type available by customer requested									
	CABLE	Standard type UL1185 6ft (with ferrite core) for stock ; Other type available by customer requested									

NOTE

1.All parameters are specified at 230VAC input, rated load, 25℃ 70% RH ambient.
2.DC voltage: The output voltage set at point measure by plug terminal & 50% load.
3.Ripple & noise are measured at 20MHz by using a 12" twisted pair terminated with a 0.1uf & 47uf capacitor.
4.Tolerance: includes set up tolerance, line regulation, load regulation.
5.Line regulation is measured from low line to high line at rated load.
6.Load regulation is measured from 20% to 100% rated load
7.The power supply is considered as an independent unit, but the final equipment still need to re-confirm that the whole system complies with the EMC directives.

LRI Distribuída no Brasil pela LRI | vendas@lri.com.br | 51 2129-3000

■ Mechanical Specification

Unit:mm

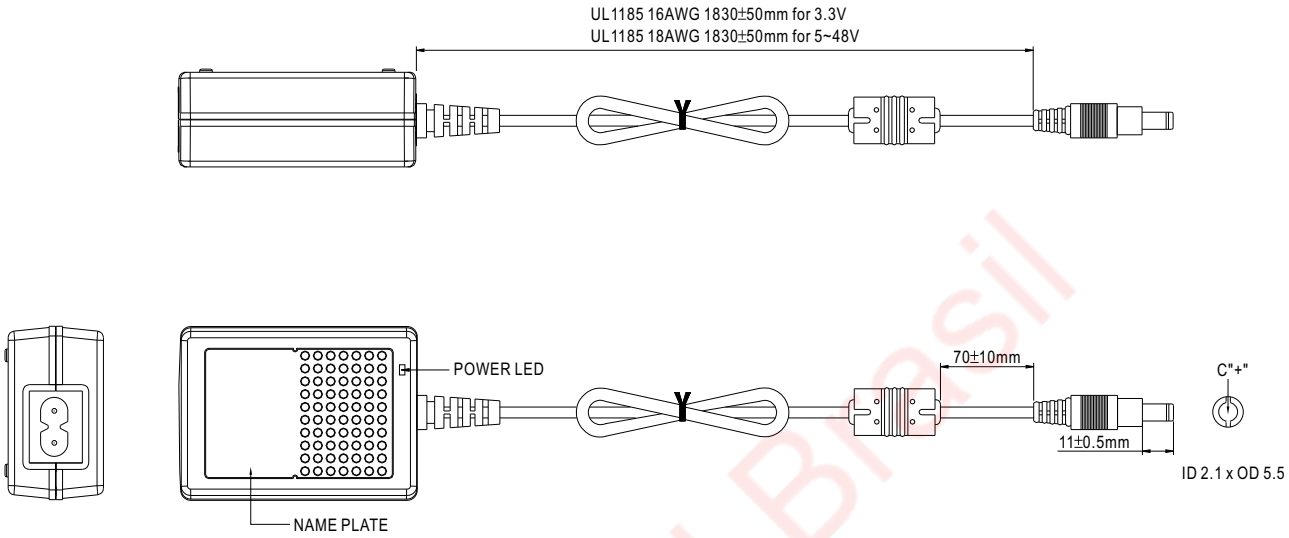

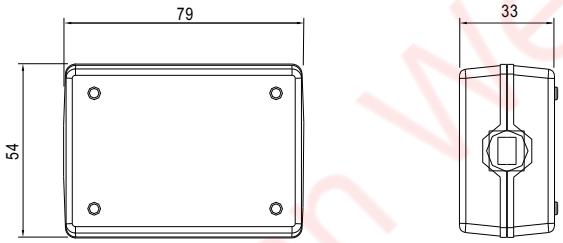

■ Plug Assignment

Standard plug: P1J (option)

P1J	
P/N	OUTPUT
CENTER	+

■ Derating Curve

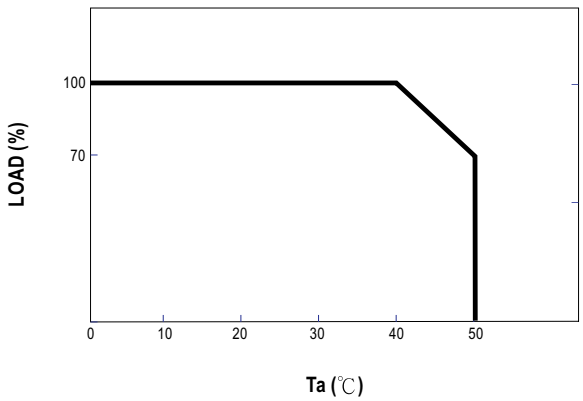

■ Static Characteristics

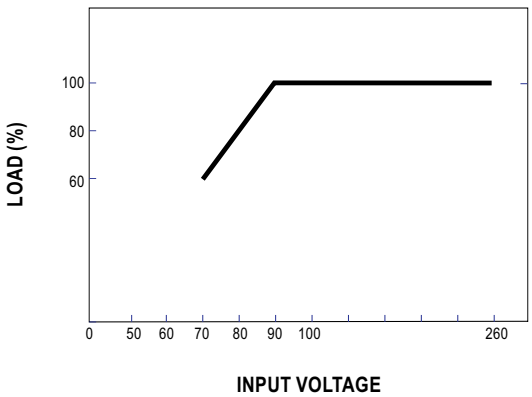

Mean Well Brasil

LRI Distribuída no Brasil pela LRI | vendas@lri.com.br | 51 2129-3000