20A Enclosed Type Redundancy Module

ERDN20



UL62368-1 IEC62368-1 TPTC004

Automate Industrial Security Network Telecom

Features

- Support 1+1 and N+1 redundancy system
- 2 channels input and 1 output
- Suitable for redundancy operation of 5V/12V/24V/48V system
- Output current up to 20A
- Cooling by free air convection
- -40~+80°C ultra-wide operating temperature (>+60°C derating)
- Built-in 2 channels DC OK signal and alarm relay contact
- 3 years warranty

Applications

- Industrial control system
- Semiconductor fabrication equipment
- Factory automation
- Electro-mechanical apparatus

GTIN CODE

MW Search: https://www.meanwell.com/serviceGTIN.aspx

Description

The ERDN20 series is a 20A redundancy module that can be used with a power supply to improve overall system operation reliability. Product key features include:5V/12V/24V/48V input voltage for selection, support N+1 and 1+1 redundancy systems,built-in two rails DC input contacts and single output. The MOSFET technology implemented can reduce heat loss and reduce the voltage difference between the input and output voltages, built-in 2 channels DC OK relay contacts for monitoring output status, ultra-wide operating temperature of -40 to +80°C.

Model Encoding

ERDN20 - 24

- 24 — Intput voltage (5V/12V/24V/48V)
- 20 — Output current (20A)
- ERDN — Enclosed Type Redundancy Module

Distribuída no Brasil pela LRI | vendas@lri.com.br | 51 2129-3000

Mean Well Brasil

20A Enclosed Type Redundancy Module

ERDN20

SPECIFICATION

MODEL		ERDN20-□			
		□ =5V, 12V, 24V, 48V			
INPUT	NUMBER OF INPUT	2 Channels			
	DC NORMAL VOLTAGE	5Vdc	12Vdc	24Vdc	48Vdc
	DC VOLTAGE RANGE	4. 5~6Vdc	9~14Vdc	19~29Vdc	36~60Vdc
	RATED CURRENT	0~20A per input Continuous			
	VOLTAGE DROP (Vin-Vout) (max.)	0.2V			
	PEAK CURRENT	0~30A per input 5Sec.			
	EFFICIENCY (Typ.)	97%	98%	98%	98%
	INPUT REVERSE CURRENT (max.)	1mA			
	INPUT REVERSE VOLTAGE (max.)	15Vdc	40Vdc	40Vdc	65Vdc
OUTPUT	RATED CURRENT	0~20A, Continuous			
	PEAK CURRENT (max.)	30A, 5Sec.			
	CAPACITANCE(Typ.)	320uF			
	STANDBY POWER LOSSES(Typ.)	1.5W			
PROTECTION	OVERLOAD	<30A, 5Sec. No damage			
	SHORT CIRCUIT	<30A, 5Sec. No damage			
FUNCTION	REDUNDANCY	For 1+1 redundancy ,and support N+1 redundancy			
	BOTH INPUTS VOLTAGE ALARM	<4V or >6.5V (±5%)	<8.5V or >14.7V (±5%)	<18V or >31V (±5%)	<34.2V or >63V (±5%)
	RELAY	30Vdc/1A resistive load			
	LED STATUS DISPLAY	Green LED OK			
ENVIRONMENT	COOLING	Free air convection			
	WORKING TEMP. Note.2	-40 ~ +80℃ (Refer to "Derating Curve")			
	WORKING HUMIDITY	5 ~ 95% RH non-condensing			
	STORAGE TEMP.	-40 ~ +85℃			
	TEMP. COEFFICIENT	±0.03%/℃ (0 ~ 60℃)			
	VIBRATION	Component:10 ~ 500Hz, 5G 10min./1cycle, 60min. each along X, Y, Z axes; Mounting: Compliance to IEC61373			
	OPERATING ALTITUDE Note.3	5000 meters/OVC II			
SAFETY & EMC (Note.4)	SAFETY STANDARDS	IEC62368-1, UL62368-1, EAC TP TC 004 approved, Design refer to BS EN/EN62368-1			
	WITHSTAND VOLTAGE	IP/OP - Chassis : 0.5KVac ; IP/OP- Relay : 0.5KVac ; Relay - Chassis : 0.5KVac			
	ISOLATION RESISTANCE	IP/OP - Chassis, IP/OP- Relay, Relay - Chassis:>100M Ohms / 500Vdc / 25℃/ 70% RH			
	EMC EMISSION	**Parameter**	**Standard**	**Test Level / Note**	
		Conducted	BS EN/EN55032(CISPR32)	Class B	
		Radiated	BS EN/EN55032(CISPR32)	Class B	
		Voltage Flicker	-----	-----	
		Harmonic Current	-----	-----	
	EMC IMMUNITY	BS EN/EN55035, BS EN/EN61000-6-2(BS EN/EN50082-2)			
		Parameter	**Standard**	**Test Level / Note**	
		ESD	BS EN/EN61000-4-2	Level 4, 15KV air ; Level 3, 8KV contact; criteria A	
		Radiated	BS EN/EN61000-4-3	Level 3, 10V/m ; criteria A	
		EFT / Burst	BS EN/EN61000-4-4	Level 3, 2KV ; criteria A	
		Surge	BS EN/EN61000-4-5	Level 3, 1KV/Line-Line ;Level 3, 2KV/Line-Line-Chassis ;criteria A	
		Conducted	BS EN/EN61000-4-6	Level 3, 10V ; criteria A	
		Magnetic Field	BS EN/EN61000-4-8	Level 4, 30A/m ; criteria A	
OTHERS	MTBF	1853.5K hrs min. Telcordia SR-332 (Bellcore) ; 378.7K hrs min. MIL-HDBK-217F (25℃)			
	DIMENSION	82*99*36mm (W*D*H)			
	PACKING	0.206Kg;45psc/10.3Kg/0.76CUFT			

NOTE

1. All parameters NOT specially mentioned are measured at normal input (5V/12V/24V/48V) , rated load and 25℃ of ambient temperature.
2. Derating may be needed over high ambient temperature. Please check the derating curve for more details.
3. The ambient temperature derating of 3.5℃/1000m with fanless models and of 5℃/1000m with fan models for operating altitude higher than 2000m(6500ft).
4. The power supply is considered as an independent unit, but the final equipment still need to re-confirm that the whole system complies with the EMC directives. For guidance on how to perform these EMC tests, please refer to “EMI testing of component power supplies.” (as available on https://www.meanwell.com//Upload/PDF/EMI_statement_en.pdf)

※ Product Liability Disclaimer : For detailed information, please refer to https://www.meanwell.com/serviceDisclaimer.aspx

LRI Distribuída no Brasil pela LRI | vendas@lri.com.br | 51 2129-3000

■ Block Diagram

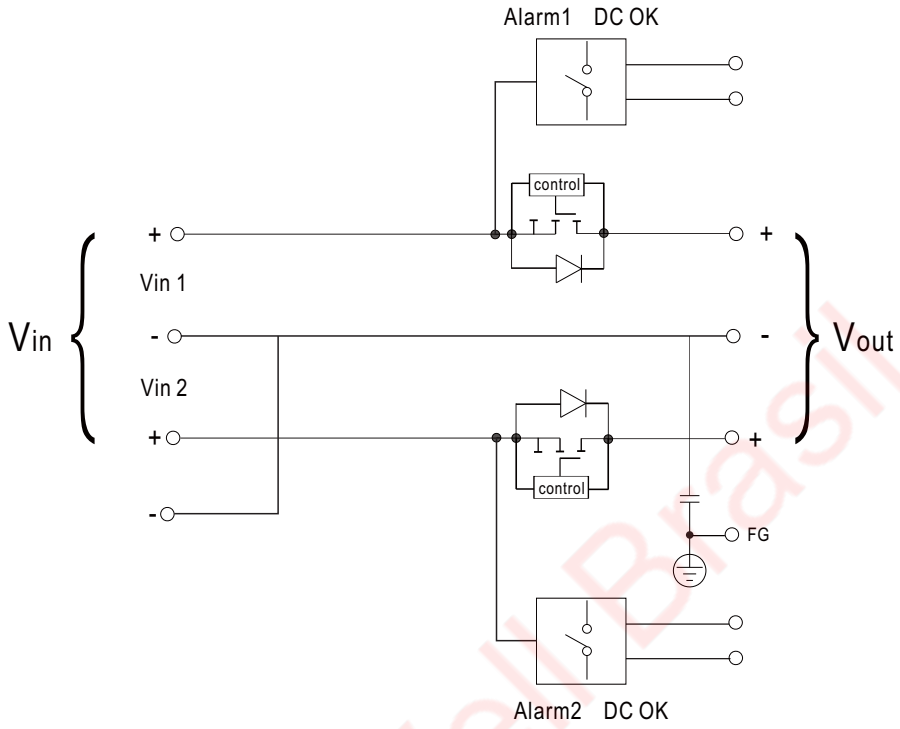

■ DC OK Relay Contact

Contact Ratings (max.)	30V/1A resistive load
Contact Close(DC OK)	PSU turns on
Contact Open(DC Fail)	PSU turns off / over or under input voltage

■ Derating Curve

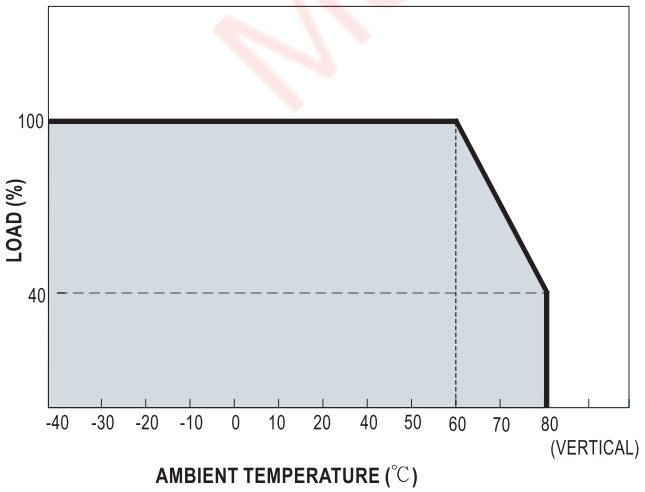

■ Output Derating VS Input Voltage

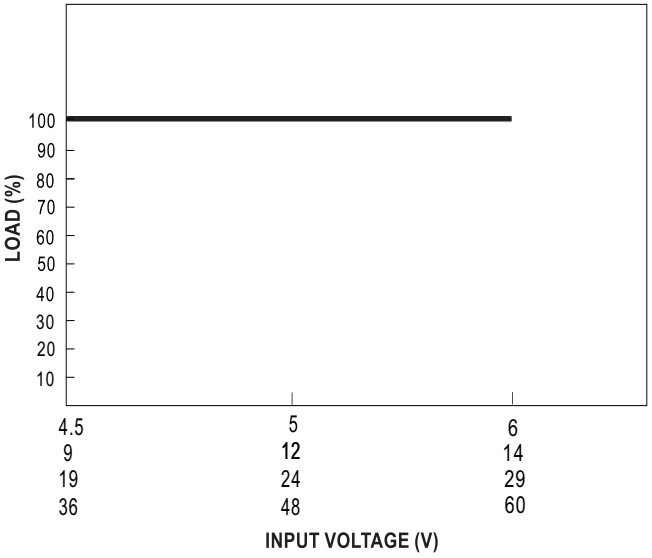

Mean Well Brasil

LRI Distribuída no Brasil pela LRI | vendas@lri.com.br | 51 2129-3000

■ Typical Application Notes

1. 1+1 Redundancy:

Using 1 more PSU as the redundant unit

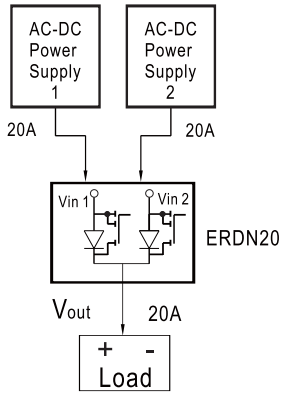

2. 1+N Redundancy:

Using more PSUs as the redundant units to increase the reliability

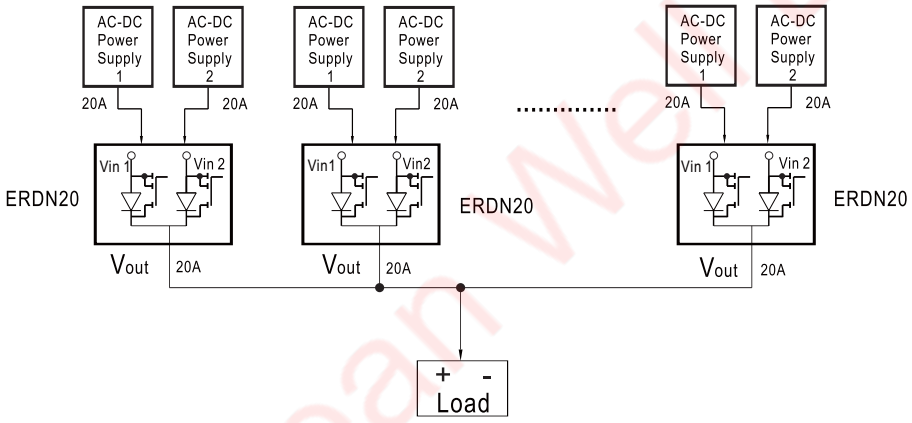

3. Single Use:

Connecting only one PSU to one ERDN20 to reduce the stress of the MOSFET and hence increase the reliability

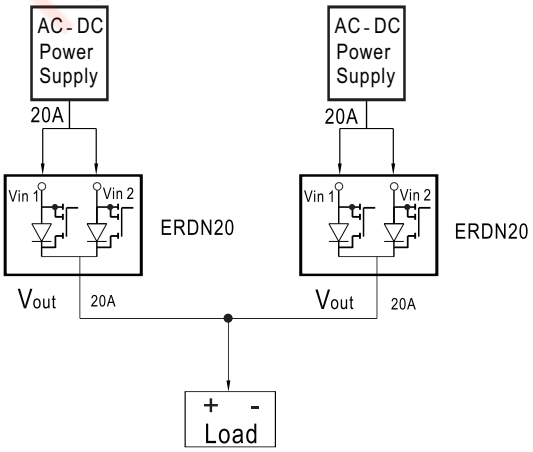

Mean Well Brasil

LRI Distribuída no Brasil pela LRI | vendas@lri.com.br | 51 2129-3000

■ Mechanical Specification

Case No.932D Unit:mm

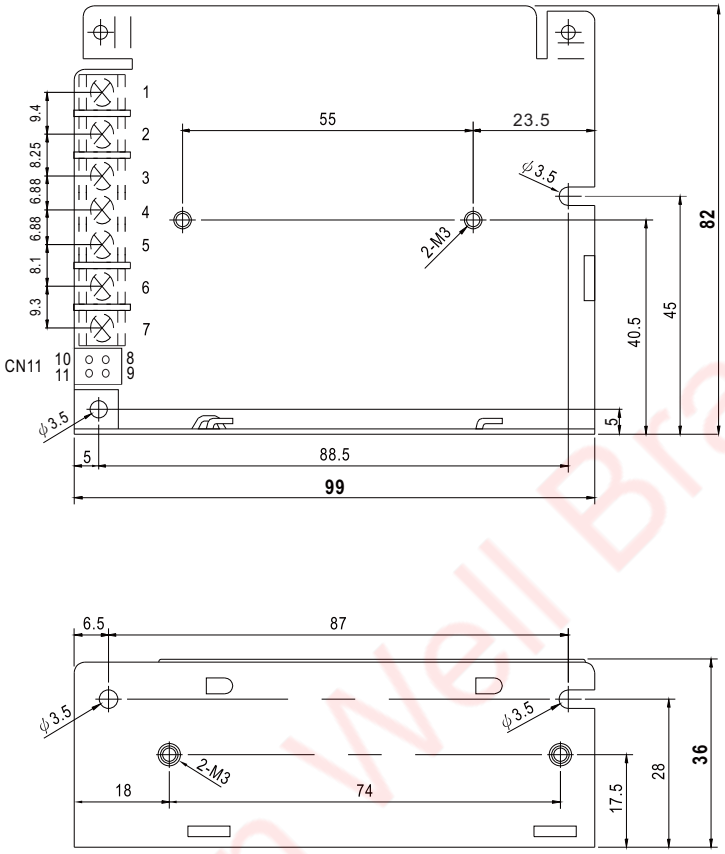

Terminal Pin No. Assignment

Pin No.	Assignment
1	FG
2	output+
3	output-
4,5	DC input -Vin
6	DC input +Vin1
7	DC input +Vin2

Function Connector(CN11): TKP DH2I-2X2 or equivalent

Pin No.	Assignment	Mating Housing	Terminal
8,9	Alarm1 DC OK	TKP DH2 or equivalent	TKP or equivalent
10,11	Alarm2 DC OK		

■ Installation Manual

Please refer to : http://www.meanwell.com/manual.html

LRI Distribuída no Brasil pela LRI | vendas@lri.com.br | 51 2129-3000