User's Manual

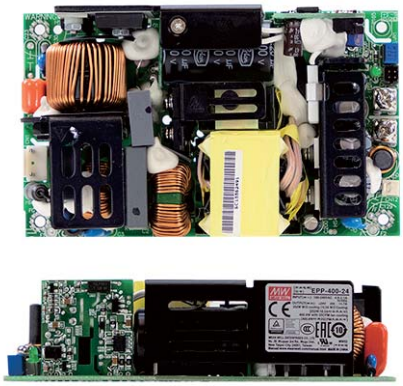

UL62368-1 TPTC004 BS EN/EN62368-1 BS EN/EN60335-1 GB4943.1 IEC62368-1

ECO Automate Industrial Security Network Telecom

■ Features

·5"×3" miniature size
·Universal AC input / Full range
·Built-in active PFC function
·EMI Class B for Class Ⅰ & Class A for Class Ⅱ configuration
·No load power consumption<0.5W by PS_ON control
·High efficiency up to 94%
·Protections: Short circuit / Overload / Over voltage / Over temperature
·Cooling by free air convection for 250W and 400W with 25CFM forced air
·Built-in 12V/0.5A FAN supply
·Standby 5V@1A with fan , 0.6A without fan
·Built-in remote sense function
·LED indicator for power on
·Output 18V available
·Operating altitude up to 5000 meters
·3 years warranty

■ Applications

·Industrial automation machinery
·Industrial control system
·Mechanical and electrical equipment
·Electronic instruments, equipments or apparatus

■ GTIN CODE

MW Search: https://www.meanwell.com/serviceGTIN.aspx

■ Description

EPP-400 is a 400W highly reliable green PCB type power supply with a high power density on the 5" by 3" footprint. It accepts 80~264VAC input and offers various output voltages between 12V and 48V. The working efficiency is up to 94% and the extremely low no load power consumption is down below 0.5W. EPP-400 is able to be used for both Class Ⅰ (with FG) and Class Ⅱ(no FG) system design. EPP-400 is equipped with complete protection functions; it is complied with the international safety regulations such as TUV BS EN/EN62368-1, TUV BS EN/EN60335-1, UL62368-1 and IEC62368-1. EPP-400 series serves as a high price-to-performance power supply solution for various industrial applications.

■ Model Encoding

EPP - 400 - 12

- 12 → Output voltage
- 400 → Output wattage
- EPP → Series name

Mean Well Brasil

SPECIFICATION

MODEL			EPP-400-12	EPP-400-15	EPP-400-18	EPP-400-24	EPP-400-27	EPP-400-36	EPP-400-48
OUTPUT	DC VOLTAGE		12V	15V	18V	24V	27V	36V	48V
	CURRENT	25CFM	33.3A	26.7A	22.3A	16.7A	14.9A	11.2A	8.4A
		Convection	20.8A	16.7A	13.9A	10.5A	9.3A	7A	5.3A
	RATED POWER	25CFM	399.6W	400.5W	401.4W	400.8W	402.3W	403.2W	403.2W
		Convection	249.6W	250.5W	250.5W	252W	251.1W	252W	254.4W
	RIPPLE & NOISE (max.) Note.2		120mVp-p	150mVp-p	180mVp-p	200mVp-p	200mVp-p	250mVp-p	250mVp-p
	VOLTAGE ADJ. RANGE(MAIN OUTPUT)		11.4~12.6V	14.3~15.8V	17.1~18.9V	22.8~25.2V	25.6 ~ 28.4V	34.2 ~37.8V	45.6 ~50.4V
	VOLTAGE TOLERANCE Note.3		±3.0%	±3.0%	±3.0%	±2.0%	±1.0%	±1.0%	±1.0%
	LINE REGULATION		±0.5%	±0.5%	±0.5%	±0.5%	±0.5%	±0.5%	±0.5%
	LOAD REGULATION		±1.0%	±1.0%	±1.0%	±1.0%	±1.0%	±1.0%	±1.0%
	SETUP, RISE TIME		1000ms, 30ms/230VAC 1500ms, 30ms/115VAC at full load						
	HOLD UP TIME (Typ.)		16ms/230VAC 12ms/115VAC at full load						
INPUT	VOLTAGE RANGE Note.4		80 ~ 264VAC 113 ~ 370VDC						
	FREQUENCY RANGE		47 ~ 63Hz						
	POWER FACTOR		PF>0.94/230VAC PF>0.98/115VAC at full load						
	EFFICIENCY (Typ.)		91.5%	92%	93%	93%	93.5%	93%	94%
	AC CURRENT (Typ.)		4.2A/115VAC 2.1A/230VAC						
	INRUSH CURRENT (Typ.)		COLD START 40A/115VAC 80A/230VAC						
	LEAKAGE CURRENT		<0.75mA / 240VAC						
PROTECTION	OVERLOAD		105 ~ 135% rated output power						
			Protection type : Hiccup mode, recovers automatically after fault condition is removed						
	OVER VOLTAGE		13.2 ~ 15.6V	16.5 ~ 19.5V	19.8 ~ 23.4V	26.4 ~ 31.2V	29.7 ~ 35.1V	39.6 ~ 46.8V	52.8 ~ 62.4V
			Protection type : Shut down o/p voltage, re-power on to recover						
	OVER TEMPERATURE		Protection type : Shut down o/p voltage, recovers automatically after temperature goes down						
FUNCTION	5V STANDBY		5VSB : 5V@0.6A without fan, 1A with fan 25CFM ; tolerance ±2%, ripple : 120mVp-p(max.)						
	FAN SUPPLY		12V@0.5A for driving a fan ; tolerance -15% ~+10% at main output 35% rated current (25CFM)						
	PS-ON INPUT SIGNAL		Power on: PS-ON = "Hi" or " > 2 ~ 5V" ; Power off: PS-ON = "Low" or " < 0 ~ 0.5V"						
	POWER GOOD / POWER FAIL		500ms>PG>10ms ; The TTL signal goes high with 10ms to 500ms delay after power set up ; The TTL signal goes low at least 1ms before Vo below 90% of rated value						
ENVIRONMENT	WORKING TEMP.		-30 ~ +70℃ (Refer to "Derating Curve")						
	WORKING HUMIDITY		20 ~ 90% RH non-condensing						
	STORAGE TEMP., HUMIDITY		-40 ~ +85℃, 10 ~ 95% RH						
	TEMP. COEFFICIENT		±0.03%/℃ (0 ~ 50℃)						
	OPERATING ALTITUDE Note.7		5000 meters						
	VIBRATION		10 ~ 500Hz, 2G 10min./1cycle, 60min. each along X, Y, Z axes						
SAFETY & EMC (Note 5)	SAFETY STANDARDS		UL62368-1, TUV BS EN/EN62368-1,BS EN/EN60335-1, IEC62368-1, CCC GB4943.1, EAC TP TC 004 approved						
	WITHSTAND VOLTAGE		I/P-O/P:3KVAC I/P-FG:2KVAC O/P-FG:0.5KVAC						
	ISOLATION RESISTANCE		I/P-O/P, I/P-FG:100M Ohms / 500VDC / 25℃/ 70% RH						
	EMC EMISSION		Compliance to BS EN/EN55032 (CISPR32) Class B, BS EN/EN61000-3-2,-3,CCC GB17625.1, GB/T9254, EAC TP TC 020						
	EMC IMMUNITY		Compliance to BS EN/EN61000-4-2,3,4,5,6,8,11, BS EN/EN55035, BS EN/EN61000-6-2, heavy industry level, EAC TP TC 020						
OTHERS	MTBF		1395.2K hrs min. Telcordia SR-332 (Bellcore) ; 194.1K hrs min. MIL-HDBK-217F (25℃)						
	DIMENSION		127*76.2*35mm (L*W*H)						
	PACKING		0.39Kg; 36pcs/15Kg/0.96CUFT						

NOTE

1. All parameters NOT specially mentioned are measured at 230VAC input, rated load and 25 of ambient temperature.
2. Ripple & noise are measured at 20MHz of bandwidth by using a 12" twisted pair-wire terminated with a 0.1 μF & 47 μF parallel capacitor.
3. Tolerance : includes set up tolerance, line regulation and load regulation.
4. Derating may be needed under low input voltages. Please check the derating curve for more details.
5. Touch current was measured from primary input to DC output.
6. The power supply is considered a component which will be installed into a final equipment. All the Class Ⅰ (with FG) EMC test are been executed by mounting the unit on a 360mm*360mm metal plate with 1mm of thickness. The Class Ⅱ (without FG) EMC test is been executed by mounting the unit on a 130mm*86.6mm metal plate with 1mm of thickness. final equipment must be re-confirmed that it still meets EMC directives. For guidance on how to perform these EMC tests, please refer to “EMI testing of component power supplies.” (as available on https://www.meanwell.com//Upload/PDF/EMI_statement_en.pdf)
7. The ambient temperature derating of 3.5℃/1000m with fanless models and of 5℃/1000m with fan models for operating altitude higher than 2000m(6500ft).

※ Product Liability Disclaimer : For detailed information, please refer to https://www.meanwell.com/serviceDisclaimer.aspx

LRI Distribuída no Brasil pela LRI | vendas@lri.com.br | 51 2129-3000

■ Block Diagram

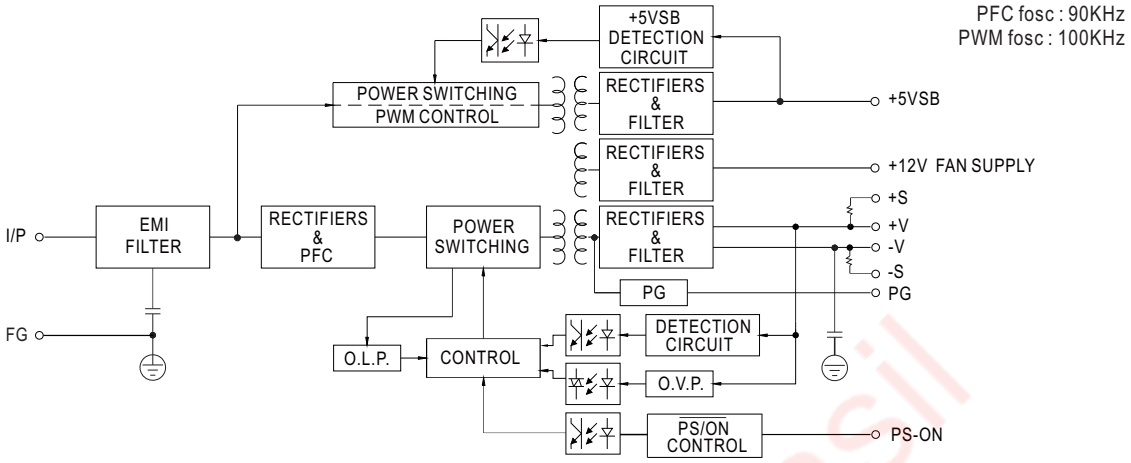

■ Derating Curve

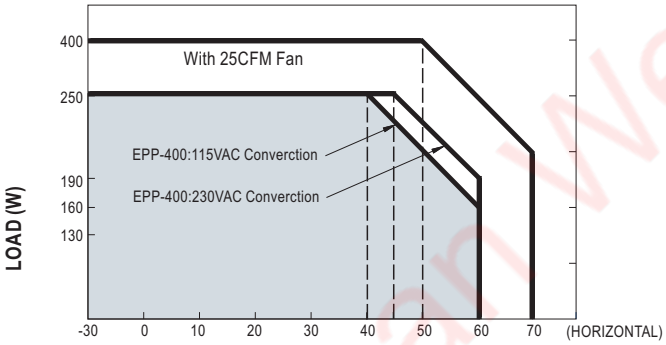

AMBIENT TEMPERATURE (℃)

■ Output Derating VS Input Voltage

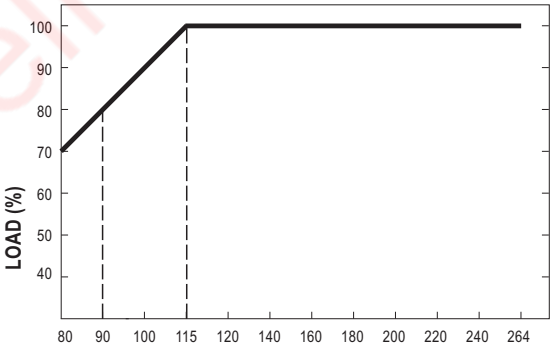

INPUT VOLTAGE (VAC) 60Hz

Without Fan Watt	250W
With Fan Watt	400W

Mean Well Brasil

■ Mechanical Specification

Unit:mm

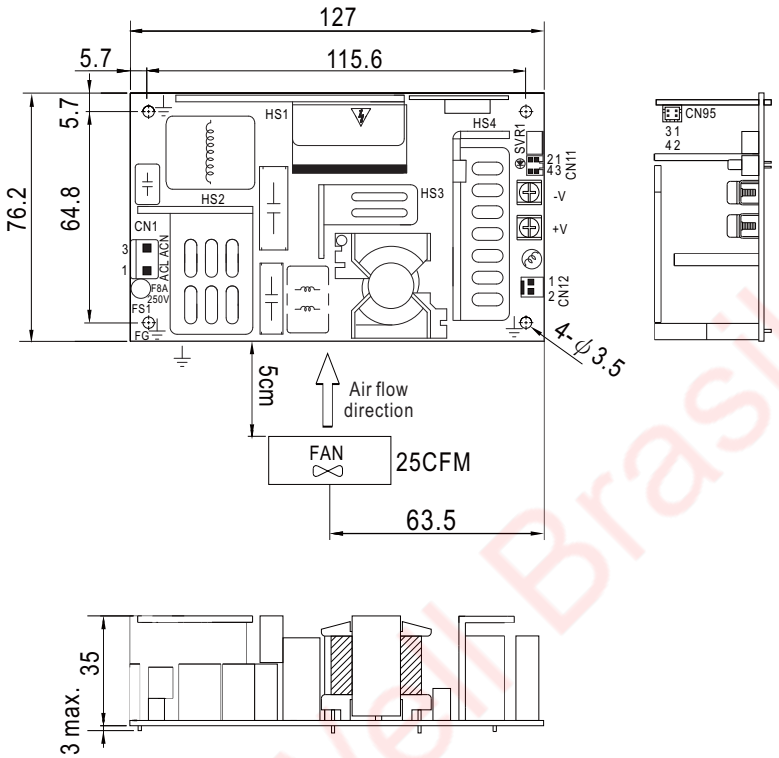

AC Input Connector (CN1) : JST B3P-VH or equivalent

Pin No.	Assignment	Mating Housing	Terminal
1	AC/L	JST VHR or equivalent	JST SVH-21T-P1.1 or equivalent
2	No Pin		
3	AC/N		

Function Connector(CN95): TKP DH2L-2X2 or equivalent

Pin No.	Assignment	Mating Housing	Terminal
1	5VSB	TKP DH2 or equivalent	TKP or equivalent
2,4	DC COM		
3	PS-ON		

FAN Connector(CN12) : TKP 8812-2 or equivalent

Pin No.	Assignment	Mating Housing	Terminal
1	DC COM	TKP 2502 or equivalent	TKP 8811 or equivalent
2	+12V		

DC Output Connector (CN2,CN3)

Pin No.	Assignment	Output Terminals
CN2	-V	M3.5 Pan HD screw in 2 positions Torque to 8 lbs-in(90cNm)max.
CN3	+V	

Function Connector(CN11): TKP DH2I-2X2 or equivalent

Pin No.	Assignment	Mating Housing	Terminal
1	-S	TKP DH2 or equivalent	TKP or equivalent
2	+S		
3	DC COM		
4	PG		

⏚ Grounding Required

⚠ HS1,HS2,HS3,HS4 can not be shorted

※ Note: When the input voltage is AC 230V the model delivers EMI Class B for both conducted emission and radiated emission for the power supply, When the input voltage is AC110V the model delivers EMI Class B for conducted emission ,Class A for radiated emission for the power supply.

It delivers Class A for conduted emission and radiated emission, when configured into Class Ⅱ (without FG) system.

■ Installation Manual

Please refer to : http://www.meanwell.com/webnet/search/InstallationSearch.html

Mean Well Brasil