MEAN WELL

300W Single Output with PFC Function

EPP-300 series

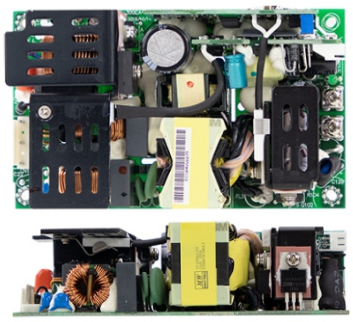

■ Features :

- Universal AC input / Full range
- Built-in active PFC function
- High efficiency up to 93%
- Withstand 300VAC surge input for 5 seconds
- Protections: Short circuit / Overload / Over voltage / Over temperature
- Built-in 12V/0.5A auxiliary output
- 5"x3" compact size
- Free air convection for 200W and 300W with 20.5 CFM forced air
- With power good and fail signal output
- Built-in remote sense function
- No load power consumption under 0.5W by PS-ON control
- Standby 5V@1A with fan, @ 0.6A without fan
- Operating altitude up to 5000 meters
- 3 years warranty

User's Manual Click Me

■ GTIN CODE

MW Search: https://www.meanwell.com/serviceGTIN.aspx

SPECIFICATION

MODEL		EPP-300-12	EPP-300-15	EPP-300-24	EPP-300-27	EPP-300-48
OUTPUT	DC VOLTAGE	12V	15V	24V	27V	48V
	RATED CURRENT (20.5CFM)	25A	20A	12.5A	11.12A	6.25A
	CURRENT RANGE (convection)	0 ~ 16.67A	0 ~ 13.33A	0 ~ 8.33A	0 ~ 7.4A	0 ~ 4.17A
	CURRENT RANGE (20.5CFM)	0 ~ 25A	0 ~ 20A	0 ~ 12.5A	0 ~ 11.12A	0 ~ 6.25A
	RATED POWER (convection)	200W	200W	199.9W	199.8W	200.2W
	RATED POWER (20.5CFM)	300W	300W	300W	300.24W	300W
	RIPPLE & NOISE (max.) Note.2	120mVp-p	120mVp-p	150mVp-p	200mVp-p	250mVp-p
	VOLTAGE ADJ. RANGE	Main output:11.4 ~ 12.6V	Main output:14.25 ~ 15.75V	Main output:22.8 ~ 25.2V	Main output:25.65 ~ 28.35V	Main output:45.6 ~ 50.4V
	VOLTAGE TOLERANCE Note.3	±3.0%	±3.0%	±2.0%	±2.0%	±2.0%
	LINE REGULATION	±0.5%	±0.5%	±0.5%	±0.5%	±0.5%
	LOAD REGULATION	±1.0%	±1.0%	±1.0%	±1.0%	±1.0%
	SETUP, RISE TIME	2500ms, 30ms/230VAC 3000ms, 30ms/115VAC at full load				
	HOLD UP TIME (Typ.)	13ms/230VAC/115VAC at full load				
INPUT	VOLTAGE RANGE Note.5	90 ~ 264VAC 127 ~ 370VDC				
	FREQUENCY RANGE	47 ~ 63Hz				
	POWER FACTOR (Typ.)	PF>0.93/230VAC PF>0.98/115VAC at full load				
	EFFICIENCY (Typ.)	90%	90%	92.5%	93%	93%
	AC CURRENT (Typ.)	3.5A/115VAC 1.8A/230VAC				
	INRUSH CURRENT (Typ.)	COLD START 40A/115VAC 80A/230VAC				
	LEAKAGE CURRENT	<2mA/240VAC				
PROTECTION	OVERLOAD	105 ~ 135% rated output power				
		Protection type : Hiccup mode, recovers automatically after fault condition is removed				
	OVER VOLTAGE	13.5 ~ 15V	16.2 ~ 18.5V	26 ~ 30V	29.5 ~ 33.5V	52 ~ 59.5V
		Protection type : Shut down o/p voltage, re-power on to recover				
	OVER TEMPERATURE	115℃±5℃ (TSW1) detect on heatsink of power transistor				
		115±5℃ (12V,15V),100±5℃ (24V,27V,48V) (TSW2) detect on heatsink of output diode				
		Protection type : (TSW1)Shut down o/p voltage, recovers automatically after temperature goes down				
		Protection type : (TSW2)Shut down o/p voltage, re-power on to recover				
FUNCTION	5V STANDBY	5VSB : 5V@0.6A without fan, 1A with fan 20.5CFM ; tolerance ± 2%, ripple : 150mVp-p(max.)				
	AUXILIARY POWER (AUX)	12V@0.5A for driving a fan ; tolerance -15% ~ +10% at main output 20% rated current (20.5CFM)				
	PS-ON INPUT SIGNAL	Power on: PS-ON = "Hi" or " > 2 ~ 5V" ; Power off: PS-ON = "Low" or " < 0 ~ 0.5V"				
	POWER GOOD / POWER FAIL	500ms>PG>10ms ; The TTL signal goes high with 10ms to 500ms delay after power set up ; The TTL signal goes low at least 1ms before Vo below 90% of rated value				
ENVIRONMENT	WORKING TEMP.	-30 ~ +70℃ (Refer to "Derating Curve")				
	WORKING HUMIDITY	20 ~ 90% RH non-condensing				
	STORAGE TEMP., HUMIDITY	-40 ~ +85℃ , 10 ~ 95% RH				
	TEMP. COEFFICIENT	±0.03%/℃ (0 ~ 50℃)				
	OPERATING ALTITUDE Note.7	5000 meters				
	VIBRATION	10 ~ 500Hz, 2G 10min./1cycle, 60min. each along X, Y, Z axes				
SAFETY & EMC (Note 4)	SAFETY STANDARDS	UL62368-1, TUV BS EN/EN62368-1, EAC TP TC 004 approved				
	WITHSTAND VOLTAGE	I/P-O/P:3KVAC I/P-FG:2KVAC O/P-FG:0.5KVAC				
	ISOLATION RESISTANCE	I/P-O/P, I/P-FG, O/P-FG:100M Ohms / 500VDC / 25℃/ 70% RH				
	EMC EMISSION	Compliance to BS EN/EN55032 (CISPR32),Conduction Class B,Radiation Class B;BS EN/EN61000-3-2,3;EAC TP TC 020				
	EMC IMMUNITY	Compliance to BS EN/EN61000-4-2,3,4,5,6,8,11, BS EN/EN55035, BS EN/EN60601-1-2, EAC TP TC 020				
OTHERS	MTBF	1490.1K hrs min. Telcordia SR-332 (Bellcore) ; 160.3K hrs min. MIL-HDBK-217F (25℃)				
	DIMENSION	127*76.2*35mm (L*W*H)				
	PACKING	0.37 Kg; 36pcs/14.3Kg/0.96CUFT;				

NOTE

1. All parameters NOT specially mentioned are measured at 230VAC input, rated load and 25℃ of ambient temperature.
2. Ripple & noise are measured at 20MHz of bandwidth by using a 12" twisted pair-wire terminated with a 0.1 μF & 47 μF parallel capacitor.
3. Tolerance : includes set up tolerance, line regulation and load regulation.
4. The power supply is considered a component which will be installed into a final equipment. The final equipment must be re-confirmed that it still meets EMC directives. For guidance on how to perform these EMC tests, please refer to "EMI testing of component power supplies." (as available on https://www.meanwell.com//Upload/PDF/EMI_statement_en.pdf)
5. Derating may be needed under low input voltages. Please check the derating curve for more details.
6. Heat Sink HS1,HS2 can not be shorted.
7. The ambient temperature derating of 3.5℃/1000m with fanless models and of 5℃/1000m with fan models for operating altitude higher than 2000m(6500ft).

※ Product Liability Disclaimer : For detailed information, please refer to https://www.meanwell.com/serviceDisclaimer.aspx

LRI Distribuída no Brasil pela LRI | vendas@lri.com.br | 51 2129-3000

Mechanical Specification

(Unit: mm , tolerance ± 1mm)

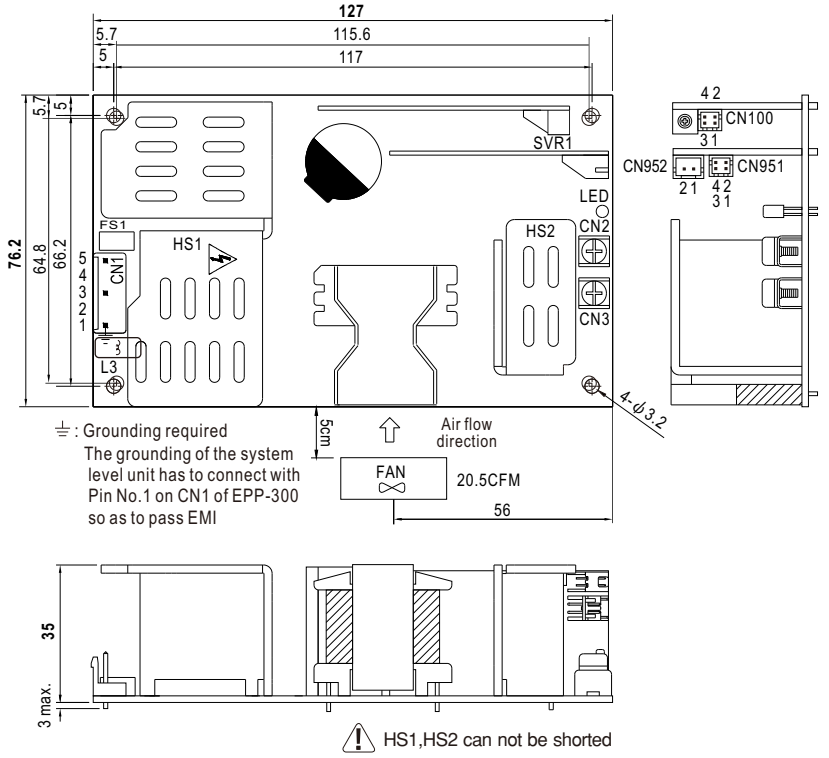

⚠ HS1,HS2 can not be shorted

AC Input Connector (CN1) : JST B5P-VH or equivalent

Pin No.	Assignment	Mating Housing	Terminal
1	FG ⏚	JST VHR or equivalent	JST SVH-21T-P1.1 or equivalent
2,4	No Pin		
3	AC/L		
5	AC/N		

DC Output Connector (CN2,CN3)

Pin No.	Assignment	Output Terminals
CN2	-V	M3.5 Pan HD screw in 2 positions
CN3	+V	Torque to 8 lbs-in(90cNm)max.

Function Connector(CN100):HRS DF11-4DP-2DS or equivalent

Pin No.	Status	Mating Housing	Terminal
1	-S	HRS DF11-4DS or equivalent	HRS DF11-**SC or equivalent
2	+S		
3	DC COM		
4	PG		

Function Connector(CN951):HRS DF11-4DP-2DS or equivalent

Pin No.	Status	Mating Housing	Terminal
1	5VSB	HRS DF11-4DS or equivalent	HRS DF11-**SC or equivalent
2,4	DC COM		
3	PS-ON		

FAN Connector(CN952) : JST S2B-XH or equivalent

Pin No.	Assignment	Mating Housing	Terminal
1	DC COM	JST XHP or equivalent	JST SXH-001T-P0.6 or equivalent
2	+12V		

Block Diagram

PFC fosc : 65KHz
PWM fosc : 70KHz

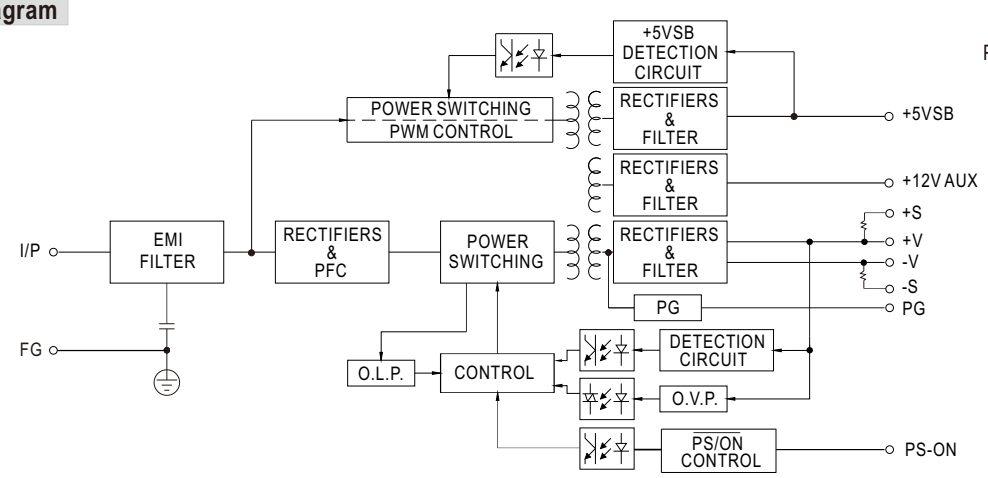

Derating Curve

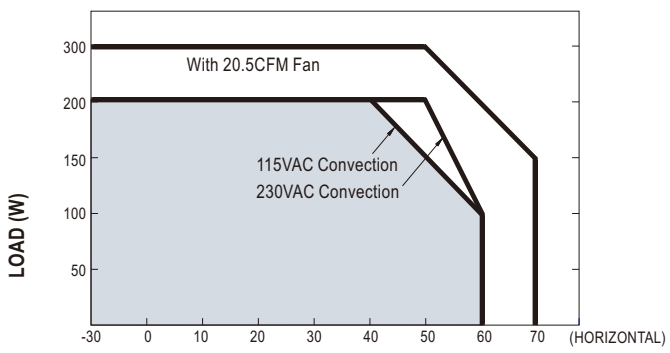

AMBIENT TEMPERATURE (℃)

Output Derating VS Input Voltage

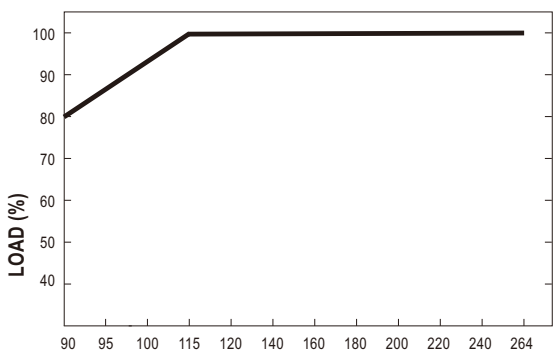

INPUT VOLTAGE (VAC) 60Hz