MEAN WELL

200W Single Output with PFC Function

EPP-200 series

User's Manual

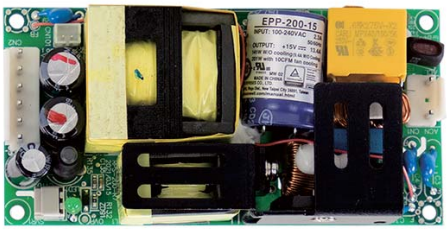



UL62368-1 TPTC004 BS EN/EN62368-1 IEC62368-1

Features

- 4"×2" miniature size
- Universal AC input / Full range
- Built-in active PFC function
- EMI Conduction for Class B Radiation for Class B with FG(Class Ⅰ) and Class A without FG(Class Ⅱ)
- No load power consumption<0.5W
- High efficiency up to 94%
- Protections: Short circuit / Overload / Over voltage / Over temperature
- Cooling by free air convection for 140W and 200W with 10CFM forced air
- Built-in 12V/0.5A FAN supply
- LED indicator for power on
- Operating altitude up to 5000 meters
- 3 years warranty

Applications

- Industrial automation machinery
- Industrial control system
- Mechanical and electrical equipment
- Electronic instruments, equipments or apparatus

GTIN CODE

MW Search: https://www.meanwell.com/serviceGTIN.aspx

Description

EPP-200 is a 200W highly reliable green PCB type power supply with a high power density (21.9W/in^3) on the 4" by 2" footprint. It accepts 80~264VAC input and offers various output voltages between 12V and 48V. The working efficiency is up to 94% and the extremely low no load power consumption is down below 0.5W. EPP-200 is able to be used for both Class Ⅰ (with FG) and Class Ⅱ (no FG) system design. EPP-200 is equipped with complete protection functions; it is complied with the international safety regulations such as TUV BS EN/EN62368-1, UL62368-1 and IEC62368-1. EPP-200 series serves as a high price-to-performance power supply solution for various industrial applications.

Model Encoding

EPP - 200 - 12

- 12 → Output voltage
- 200 → Output wattage
- EPP → Series name

Distribuída no Brasil pela LRI | vendas@lri.com.br | 51 2129-3000

Mean Well Brasil

SPECIFICATION

MODEL			EPP-200-12	EPP-200-15	EPP-200-24	EPP-200-27	EPP-200-48
OUTPUT	DC VOLTAGE		12V	15V	24V	27V	48V
	CURRENT	10CFM	16.7A	13.4A	8.4A	7.5A	4.2A
		Convection	11.7A	9.4A	5.9A	5.3A	3A
	RATED POWER	10CFM	200.4W	201W	201.6W	202.5W	201.6W
		Convection	140.4W	141W	141.6W	143.1W	144W
	RIPPLE & NOISE (max.) Note.2		100mVp-p	100mVp-p	150mVp-p	150mVp-p	200mVp-p
	VOLTAGE ADJ. RANGE		11.4~12.6V	14.3~15.8V	22.8~25.2V	25.6 ~ 28.4V	45.6 ~50.4V
	VOLTAGE TOLERANCE Note.3		±2.0%	±2.5%	±1.0%	±1.0%	±1.0%
	LINE REGULATION		±0.5%	±0.5%	±0.5%	±0.5%	±0.5%
	LOAD REGULATION		±1.0%	±1.0%	±1.0%	±1.0%	±1.0%
	SETUP, RISE TIME		500ms, 30ms/230VAC 500ms, 30ms/115VAC at full load				
	HOLD UP TIME (Typ.)		12ms/230VAC 12ms/115VAC at full load				
INPUT	VOLTAGE RANGE Note.4		80 ~ 264VAC 113 ~ 370VDC				
	FREQUENCY RANGE		47 ~ 63Hz				
	POWER FACTOR		PF>0.94/230VAC PF>0.98/115VAC at full load				
	EFFICIENCY (Typ.)		93%	93%	94%	94%	94%
	AC CURRENT (Typ.)		1.8A/115VAC 1A/230VAC				
	INRUSH CURRENT (Typ.)		COLD START 30A/115VAC 60A/230VAC				
	LEAKAGE CURRENT		<0.75mA / 240VAC				
PROTECTION	OVERLOAD		110 ~ 140% rated output power				
			Protection type : Hiccup mode, recovers automatically after fault condition is removed				
	OVER VOLTAGE		13.2 ~ 15.6V	16.5 ~ 19.5V	26.4 ~ 31.2V	29.7 ~ 35V	52.8 ~ 62.4V
			Protection type : Shut down o/p voltage, re-power on to recover				
	OVER TEMPERATURE		Protection type : Shut down o/p voltage, re-power on to recover				
FUNCTION	FAN SUPPLY		12V@0.5A for driving a fan ; tolerance +15% ~ -15% at main output 20% rated current (10CFM)				
ENVIRONMENT	WORKING TEMP.		-30 ~ +70℃ (Refer to "Derating Curve")				
	WORKING HUMIDITY		20 ~ 90% RH non-condensing				
	STORAGE TEMP., HUMIDITY		-40 ~ +85℃, 10 ~ 95% RH				
	TEMP. COEFFICIENT		±0.03%/℃ (0 ~ 50℃)				
	OPERATING ALTITUDE Note.6		5000 meters				
	VIBRATION		10 ~ 500Hz, 2G 10min./1cycle, 60min. each along X, Y, Z axes				
SAFETY & EMC (Note 5)	SAFETY STANDARDS		UL62368-1, TUV BS EN/EN62368-1, IEC62368-1, EAC TP TC 004 approved				
	WITHSTAND VOLTAGE		I/P-O/P:3KVAC I/P-FG:2KVAC O/P-FG:0.5KVAC				
	ISOLATION RESISTANCE		I/P-O/P, I/P-FG:100M Ohms / 500VDC / 25℃/ 70% RH				
	EMC EMISSION		Compliance to BS EN/EN55032 (CISPR32) Conduction for Class B Radiation for Class B with FG(Class Ⅰ) and Class A without FG(Class Ⅱ), BS EN/EN61000-3-2,-3, EAC TP TC 020				
	EMC IMMUNITY		Compliance to BS EN/EN61000-4-2,3,4,5,6,8,11, BS EN/EN55035, BS EN/EN61000-6-2, heavy industry level, criteria A, EAC TP TC 020				
OTHERS	MTBF		2672.7K hrs min. Telcordia SR-332 (Bellcore) ; 500.3K hrs min. MIL-HDBK-217F (25℃)				
	DIMENSION		101.6*50.8*29mm (L*W*H)				
	PACKING		0.19Kg; 72pcs/14.7Kg/0.82CUFT				

NOTE

1. All parameters NOT specially mentioned are measured at 230VAC input, rated load and 25 of ambient temperature.
2. Ripple & noise are measured at 20MHz of bandwidth by using a 12" twisted pair-wire terminated with a 0.1 μF & 47 μF parallel capacitor.
3. Tolerance : includes set up tolerance, line regulation and load regulation.
4. Derating may be needed under low input voltages. Please check the derating curve for more details.
5. The power supply is considered a component which will be installed into a final equipment. All the EMC tests are been executed by mounting the unit on a 360mm*360mm metal plate with 1mm of thickness. The final equipment must be re-confirmed that it still meets EMC directives. For guidance on how to perform these EMC tests, please refer to "EMI testing of component power supplies." (as available on https://www.meanwell.com//Upload/PDF/EMI_statement_en.pdf)
6. The ambient temperature derating of 3.5℃/1000m with fanless models and of 5℃/1000m with fan models for operating altitude higher than 2000m(6500ft).

※ Product Liability Disclaimer : For detailed information, please refer to https://www.meanwell.com/serviceDisclaimer.aspx

Mean Well Brasil

LRI Distribuída no Brasil pela LRI | vendas@lri.com.br | 51 2129-3000

■ Block Diagram

fosc : 65KHz

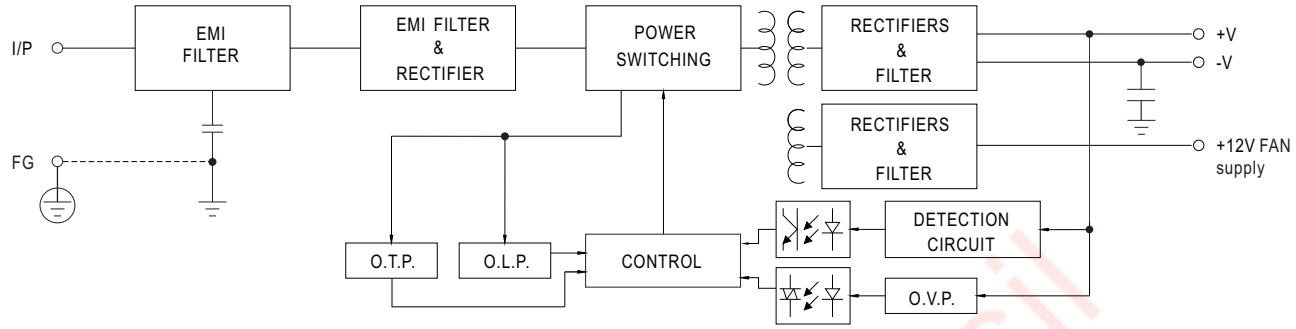

■ Derating Curve

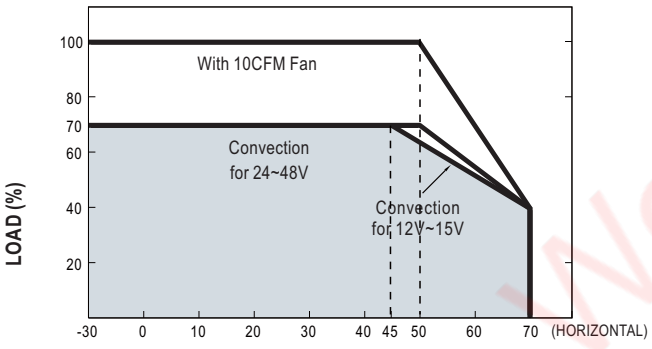

AMBIENT TEMPERATURE (℃)

■ Output Derating VS Input Voltage

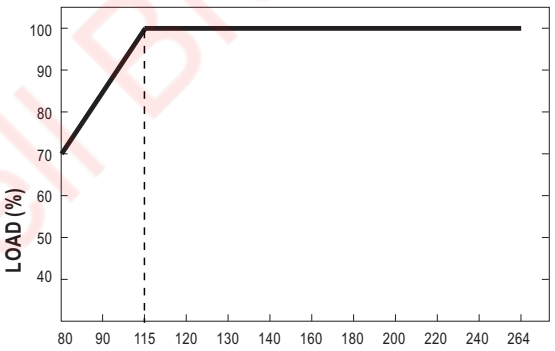

INPUT VOLTAGE (VAC) 60Hz

Mean Well Brasil

Distribuída no Brasil pela LRI | vendas@lri.com.br | 51 2129-3000

■ Mechanical Specification

Unit:mm

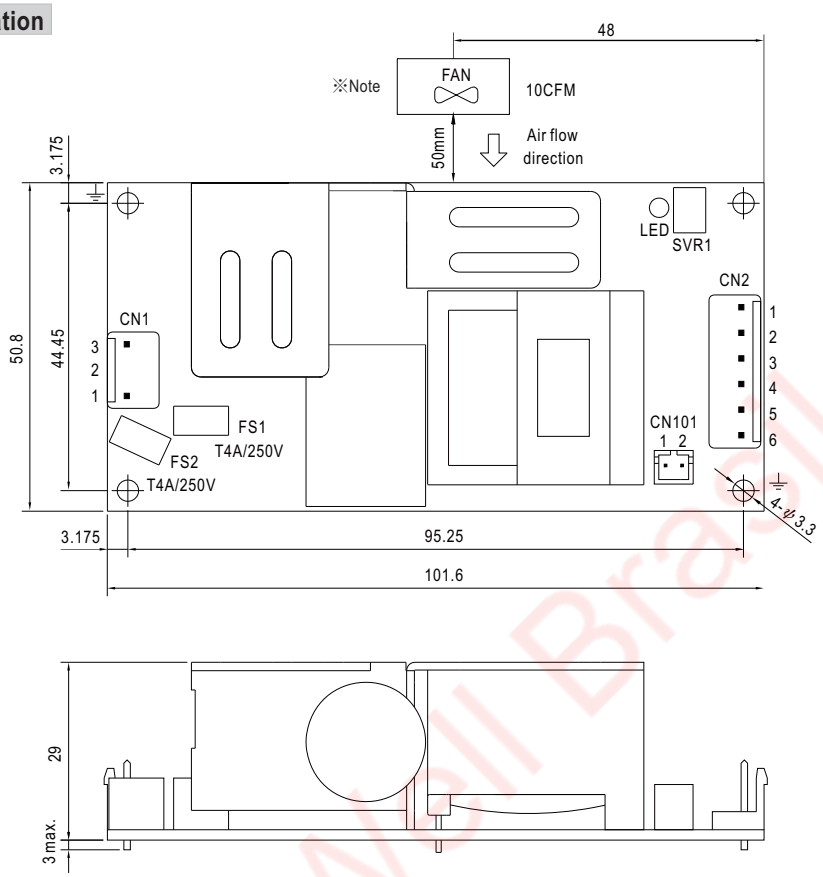

AC Input Connector (CN1) : JST B3P-VH or equivalent

Pin No.	Assignment	Mating Housing	Terminal
1	AC/L	JST VHR or equivalent	JST SVH-21T-P1.1 or equivalent
2	No Pin		
3	AC/N		

⏚ : Grounding required

DC Output Connector (CN2) : JST B6P-VH or equivalent

Pin No.	Assignment	Mating Housing	Terminal
1,2,3	+V	JST VHR or equivalent	JST SVH-21T-P1.1 or equivalent
4,5,6	-V		

FAN Connector(CN101) : JST B2B-PH-K-S or equivalent

Pin No.	Assignment	Mating Housing	Terminal
1	+12V	JST PHR-2 or equivalent	JST SPH-002T-P0.5S or equivalent
2	DC COM		

※Note : 1. The FAN supply is designed to serve as the source of the additive external fan for the cooling of the power supply, enabling the full load delivery and assuring the best life span of the product. Please do not use this FAN supply to drive other devices.
2.EMI Conduction for Class B Radiation for Class B with FG(Class Ⅰ) and Class A without FG(Class Ⅱ).

■ Installation Manual

Please refer to : http://www.meanwell.com/manual.html

Distribuída no Brasil pela LRI | vendas@lri.com.br | 51 2129-3000