150W Single Output with PFC Function

EPP-150 series

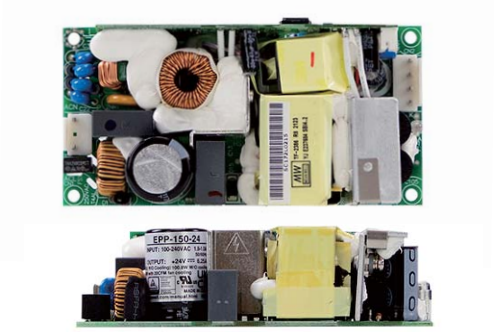

User's Manual

Features :

- 4"x2" Compact size
- Universal AC input / Full range
- Built-in active PFC function
- High efficiency up to 93%
- Protections: Short circuit / Overload / Over voltage/ Over temperature
- 100W free air convection, 150W with 20CFM forced air
- LED indicator for power on
- No load power consumption<0.5W
- Built-in 12V/0.3A auxiliary output
- 3 years warranty

GTIN CODE

MW Search: https://www.meanwell.com/serviceGTIN.aspx

UL62368-1 TPTC004 BS EN/EN62368-1 IEC62368-1

SPECIFICATION

MODEL		EPP-150-12	EPP-150-15	EPP-150-24	EPP-150-27	EPP-150-48
OUTPUT	DC VOLTAGE	12V	15V	24V	27V	48V
	RATED CURRENT (convection)	8.4A	6.7A	4.2A	3.71A	2.1A
	RATED CURRENT (20CFM FAN)	12.5A	10A	6.25A	5.56A	3.125A
	CURRENT RANGE (convection)	0 ~ 8.4A	0 ~ 6.7A	0 ~ 4.2A	0 ~ 3.71A	0 ~ 2.1A
	CURRENT RANGE (20CFM FAN)	0 ~ 12.5A	0 ~ 10A	0 ~ 6.25A	0 ~ 5.56A	0 ~ 3.125A
	RATED POWER (convection)	100.8W	100.5W	100.8W	100.17W	100.8W
	RATED POWER (20CFM FAN)	150W	150W	150W	150.12W	150W
	RIPPLE & NOISE (max.) Note.2	130mVp-p	150mVp-p	240mVp-p	240mVp-p	300mVp-p
	VOLTAGE ADJ. RANGE	11.76 ~ 12.6V	14.7 ~ 15.75V	23.52 ~ 25.2V	26.46 ~ 28.35V	47.04 ~ 50.4V
	VOLTAGE TOLERANCE Note.3	±2.0%	±2.0%	±1.0%	±1.0%	±1.0%
	LINE REGULATION	±0.5%	±0.5%	±0.5%	±0.5%	±0.5%
	LOAD REGULATION	±1.0%	±1.0%	±1.0%	±1.0%	±1.0%
	SETUP, RISE TIME	1000ms, 30ms/230VAC 2000ms, 30ms/115VAC at full load				
	HOLD UP TIME (Typ.)	16ms/230VAC 16ms/115VAC at full load				
INPUT	VOLTAGE RANGE Note.4	90 ~ 264VAC 127 ~ 370VDC				
	FREQUENCY RANGE	47 ~ 63Hz				
	POWER FACTOR (Typ.)	PF>0.95/230VAC PF>0.98/115VAC at full load				
	EFFICIENCY (Typ.)	91.5%	92%	93%	92%	92%
	AC CURRENT (Typ.)	1.8A/115VAC 1 A/230VAC				
	INRUSH CURRENT (Typ.)	COLD START 70A/230VAC				
	LEAKAGE CURRENT	<2mA/240VAC				
PROTECTION	OVER LOAD	105 ~ 145% rated output power				
		Protection type : Hiccup mode, recovers automatically after fault condition is removed				
	OVER VOLTAGE	13.2 ~ 15.6V	16.83 ~ 19.5V	27.7 ~ 31.5V	30.2 ~ 34.05V	51.3 ~ 62.7V
		Protection type : Shut down o/p voltage, re-power on to recover				
	OVER TEMPERATURE	Protection type : Shut down o/p voltage, re-power on to recover				
FUNCTION	AUXILIARY POWER(AUX)	12V@0.3A for driving a fan, tolerance ±10% at main output 100% load				
ENVIRONMENT	WORKING TEMP.	-30 ~ +70℃ (Refer to "Derating Curve")				
	WORKING HUMIDITY	20 ~ 90% RH non-condensing				
	STORAGE TEMP., HUMIDITY	-40 ~ +85℃, 10 ~ 95% RH				
	TEMP. COEFFICIENT	±0.03%/℃ (0 ~ 45℃)				
	OPERATING ALTITUDE Note.5	2000 meters				
	VIBRATION	10 ~ 500Hz, 2G 10min./1cycle, period for 60min. each along X, Y, Z axes				
SAFETY & EMC (Note 6)	SAFETY STANDARDS	UL62368-1, TUV BS EN/EN62368-1, EAC TP TC 004 approved				
	WITHSTAND VOLTAGE	I/P-O/P:3KVAC I/P-FG:2KVAC O/P-FG:0.5KVAC				
	ISOLATION RESISTANCE	I/P-O/P, I/P-FG, O/P-FG:100M Ohms / 500VDC/ 500VDC / 25℃/ 70% RH				
	EMC EMISSION	Compliance to BS EN/EN55032 (CISPR32) Class B, BS EN/EN61000-3-2,-3, EAC TP TC 020				
	EMC IMMUNITY	Compliance to BS EN/EN61000-4-2,3,4,5,6,8,11, BS EN/EN55035, heavy industry level, EAC TP TC 020				
OTHERS	MTBF	2002.2K hrs min. Telcordia SR-332 (Bellcore) ; 207.1K hrs min. MIL-HDBK-217F (25℃)				
	DIMENSION	101.6*50.8*29mm (L*W*H)				
	PACKING	0.2Kg; 72pcs/15.4Kg/0.82CUFT				

NOTE

1. All parameters NOT specially mentioned are measured at 230VAC input, rated load and 25℃ of ambient temperature.
2. Ripple & noise are measured at 20MHz of bandwidth by using a 12" twisted pair-wire terminated with a 0.1 μF & 47 μF parallel capacitor.
3. Tolerance : includes set up tolerance, line regulation and load regulation.
4. Derating may be needed under low input voltages. Please check the derating curve for more details.
5. The ambient temperature derating of 3.5℃/1000m with fanless models and of 5℃/1000m with fan models for operating altitude higher than 2000m(6500ft).
6. The power supply is considered a component which will be installed into a final equipment. All the EMC tests are been executed by mounting the unit on a 360mm*360mm metal plate with 1mm of thickness. The final equipment must be re-confirmed that it still meets EMC directives. For guidance on how to perform these EMC tests, please refer to "EMI testing of component power supplies." (as available on https://www.meanwell.com//Upload/PDF/EMI_statement_en.pdf)

※ Product Liability Disclaimer : For detailed information, please refer to https://www.meanwell.com/serviceDisclaimer.aspx

LRI Distribuída no Brasil pela LRI | vendas@lri.com.br | 51 2129-3000

Mechanical Specification

Unit:mm

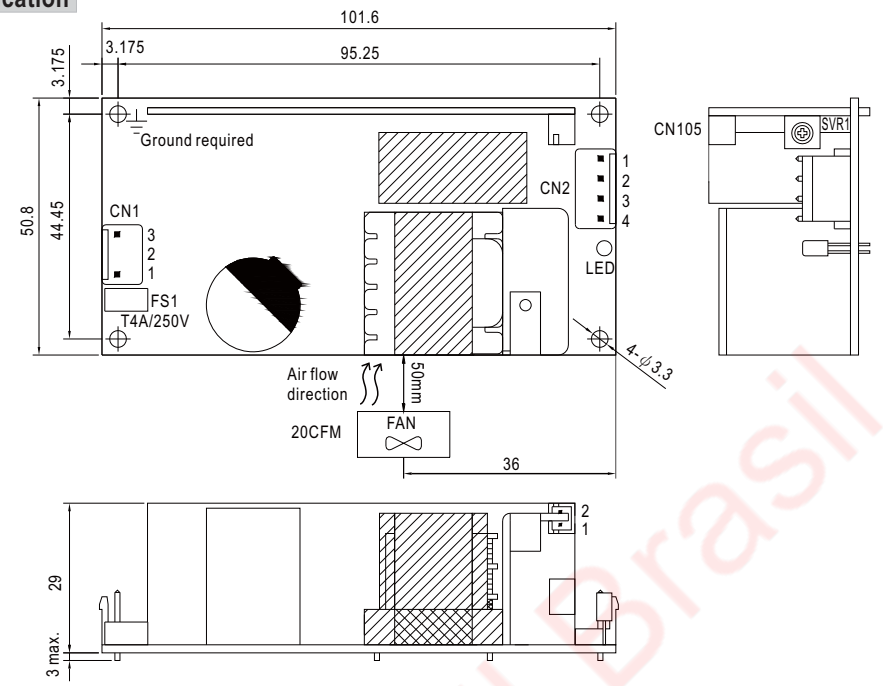

AC Input Connector (CN1) : JST B3P-VH or equivalent

Pin No.	Assignment	Mating Housing	Terminal
1	AC/L	JST VHR or equivalent	JST SVH-21T-P1.1 or equivalent
2	No Pin		
3	AC/N		

⏚ : Grounding required

DC Output Connector (CN2) : JST B4P-VH or equivalent

Pin No.	Assignment	Mating Housing	Terminal
1,2	DC COM	JST VHR or equivalent	JST SVH-21T-P1.1 or equivalent
3,4	+V		

FAN Connector(CN105) : JST B2B-PH-K-S or equivalent

Pin No.	Assignment	Mating Housing	Terminal
1	DC COM	JST PHR-2 or equivalent	JST SPH-002T-P0.5S or equivalent
2	+12V		

Block Diagram

PFC fosc : 47KHz
PWM fosc : 65KHz

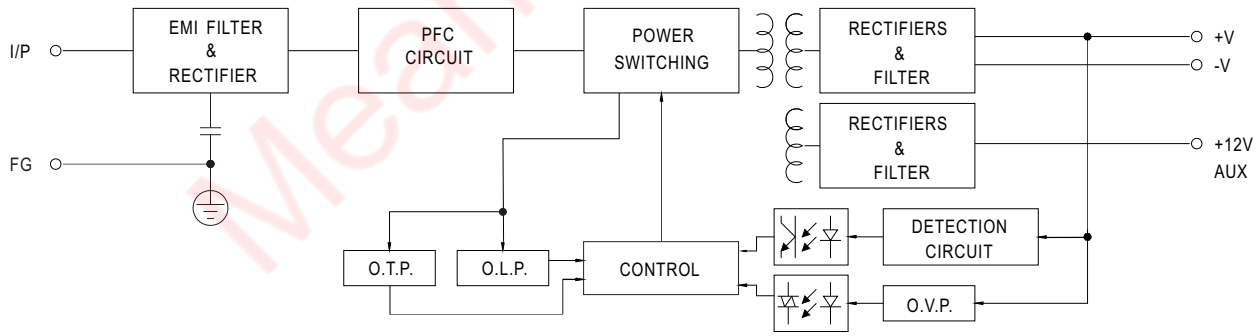

Output Derating

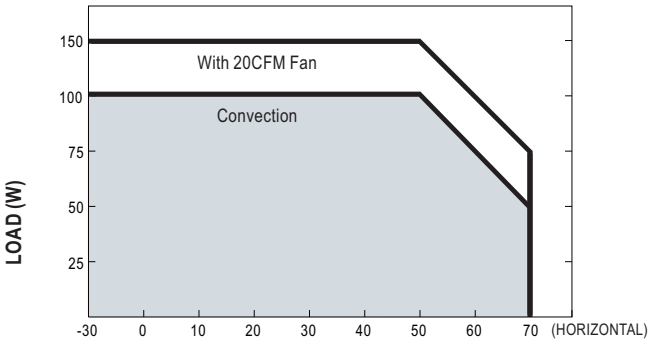

Output Derating VS Input Voltage

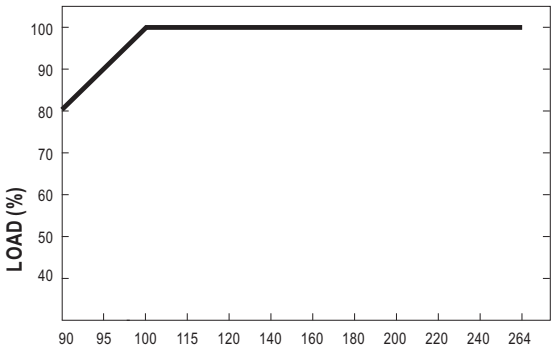

Mean Well Brasil