# 100W Single Output with PFC Function

# EPP-100 series



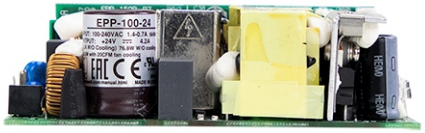

User's Manual

## Features :

- 4"x2" Compact size
- Universal AC input / Full range
- Built-in active PFC function
- High efficiency up to 92.5%
- Protections: Short circuit / Overload / Over voltage/Over temperature
- 75W free air convection, 100W with 20CFM forced air
- LED indicator for power on
- No load power consumption<0.5W
- Built-in 12V/0.3A auxiliary output
- 3 years warranty

## GTIN CODE

MW Search: https://www.meanwell.com/serviceGTIN.aspx

UL62368-1 BS EN/EN62368-1 TPTC004 IEC62368-1

## SPECIFICATION

| MODEL | | EPP-100-12 | EPP-100-15 | EPP-100-24 | EPP-100-27 | EPP-100-48 |
|---|---|---|---|---|---|---|
| OUTPUT | DC VOLTAGE | 12V | 15V | 24V | 27V | 48V |
| | RATED CURRENT (convection) | 6.3A | 5A | 3.2A | 2.8A | 1.6A |
| | RATED CURRENT (20CFM FAN) | 8.5A | 6.67A | 4.2A | 3.71A | 2.1A |
| | CURRENT RANGE (convection) | 0 ~ 6.3A | 0 ~ 5A | 0 ~ 3.2A | 0 ~ 2.8A | 0 ~ 1.6A |
| | CURRENT RANGE (20CFM FAN) | 0 ~ 8.5A | 0 ~ 6.67A | 0 ~ 4.2A | 0 ~ 3.71A | 0 ~ 2.1A |
| | RATED POWER (convection) | 75.6W | 75W | 76.8W | 75.6W | 76.8W |
| | RATED POWER (20CFM FAN) | 102W | 100.05W | 100.8W | 100.17W | 100.8W |
| | RIPPLE & NOISE (max.) Note.2 | 120mVp-p | 150mVp-p | 240mVp-p | 240mVp-p | 300mVp-p |
| | VOLTAGE ADJ. RANGE | 11.76 ~ 12.6V | 14.7 ~ 15.75V | 23.52 ~ 25.2V | 26.46 ~ 28.35V | 47.04 ~ 50.4V |
| | VOLTAGE TOLERANCE Note.3 | ±2.0% | ±2.0% | ±1.0% | ±1.0% | ±1.0% |
| | LINE REGULATION | ±0.5% | ±0.5% | ±0.5% | ±0.5% | ±0.5% |
| | LOAD REGULATION | ±1.0% | ±1.0% | ±1.0% | ±1.0% | ±1.0% |
| | SETUP, RISE TIME | 1000ms, 30ms/230VAC 2000ms, 30ms/115VAC at full load | | | | |
| | HOLD UP TIME (Typ.) | 16ms/230VAC 16ms/115VAC at full load | | | | |
| INPUT | VOLTAGE RANGE Note.5 | 90 ~ 264VAC 127 ~ 370VDC | | | | |
| | FREQUENCY RANGE | 47 ~ 63Hz | | | | |
| | POWER FACTOR (Typ.) | PF>0.95/230VAC PF>0.98/115VAC at full load | | | | |
| | EFFICIENCY (Typ.) | 91% | 91% | 92% | 92.5% | 92.5% |
| | AC CURRENT (Typ.) | 1.4A/115VAC 0.7A/230VAC | | | | |
| | INRUSH CURRENT (Typ.) | COLD START 70A/230VAC | | | | |
| | LEAKAGE CURRENT | <2mA/240VAC | | | | |
| PROTECTION | OVER LOAD | 105 ~ 145% rated output power | | | | |
| | | Protection type : Hiccup mode, recovers automatically after fault condition is removed | | | | |
| | OVER VOLTAGE | 13.2 ~ 15.6V | 16.83 ~ 19.5V | 27.7 ~ 31.5V | 30.2 ~ 34.05V | 51.3 ~ 62.7V |
| | | Protection type : Shut down o/p voltage, re-power on to recover | | | | |
| | OVER TEMPERATURE | 110°C±10°C (RTH2),110°C±5°C (TSW2) | | | | |
| | | Protection type : Shut down o/p voltage, re-power on to recover | | | | |
| FUNCTION | AUXILIARY POWER(AUX) | 12V@0.3A for driving a fan, tolerance ±10% at main output 100% load | | | | |
| ENVIRONMENT | WORKING TEMP. | -30 ~ +70°C (Refer to "Derating Curve") | | | | |
| | WORKING HUMIDITY | 20 ~ 90% RH non-condensing | | | | |
| | STORAGE TEMP., HUMIDITY | -40 ~ +85°C, 10 ~ 95% RH | | | | |
| | TEMP. COEFFICIENT | ±0.03%/°C (0 ~ 45°C) | | | | |
| | OPERATING ALTITUDE Note.6 | 2000 meters | | | | |
| | VIBRATION | 10 ~ 500Hz, 2G 10min./1cycle, period for 60min. each along X, Y, Z axes | | | | |
| SAFETY & EMC (Note 4) | SAFETY STANDARDS | UL62368-1, TUV BS EN/EN62368-1, EAC TP TC 004 approved | | | | |
| | WITHSTAND VOLTAGE | I/P-O/P:3KVAC I/P-FG:2KVAC O/P-FG:0.5KVAC | | | | |
| | ISOLATION RESISTANCE | I/P-O/P, I/P-FG, O/P-FG:100M Ohms / 500VDC/ 500VDC / 25°C/ 70% RH | | | | |
| | EMC EMISSION | Compliance to BS EN/EN55032 (CISPR32) Class B, BS EN/EN61000-3-2,-3, EAC TP TC 020 | | | | |
| | EMC IMMUNITY | Compliance to BS EN/EN61000-4-2,3,4,5,6,8,11, BS EN/EN55035, heavy industry level, EAC TP TC 020 | | | | |
| OTHERS | MTBF | 2401.7K hrs min. Telcordia SR-332 (Bellcore) ; 249.6K hrs min. MIL-HDBK-217F (25°C) | | | | |
| | DIMENSION | 101.6*50.8*29mm (L*W*H) | | | | |
| | PACKING | 0.2Kg; 72pcs/15.4Kg/0.82CUFT | | | | |

NOTE

1. All parameters NOT specially mentioned are measured at 230VAC input, rated load and 25°C of ambient temperature.
2. Ripple & noise are measured at 20MHz of bandwidth by using a 12" twisted pair-wire terminated with a 0.1 μF & 47 μF parallel capacitor.
3. Tolerance : includes set up tolerance, line regulation and load regulation.
4. The power supply is considered a component which will be installed into a final equipment. The final equipment must be re-confirmed that it still meets EMC directives. (as available on https://www.meanwell.com//Upload/PDF/EMI_statement_en.pdf )
5. Derating may be needed under low input voltages. Please check the derating curve for more details.
6. The ambient temperature derating of 3.5°C/1000m with fanless models and of 5°C/1000m with fan models for operating altitude higher than 2000m(6500ft).

※ Product Liability Disclaimer : For detailed information, please refer to https://www.meanwell.com/serviceDisclaimer.aspx



LRI Distribuída no Brasil pela LRI | vendas@lri.com.br | 51 2129-3000

## ■ Mechanical Specification

Unit:mm

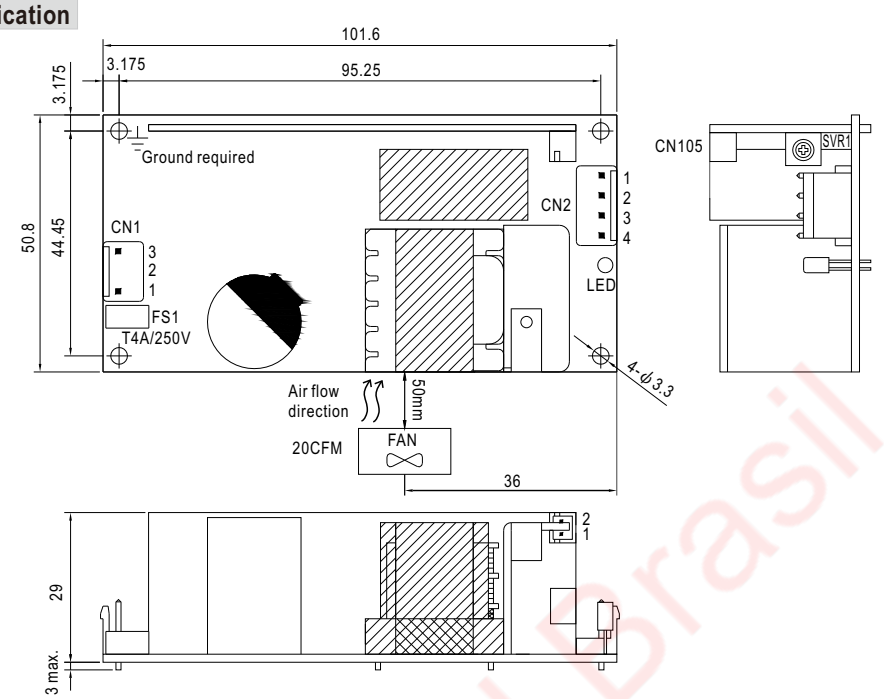


AC Input Connector (CN1) : JST B3P-VH or equivalent

| Pin No. | Assignment | Mating Housing | Terminal |
|---|---|---|---|
| 1 | AC/L | JST VHR or equivalent | JST SVH-21T-P1.1 or equivalent |
| 2 | No Pin | | |
| 3 | AC/N | | |

⏚ : Grounding required

DC Output Connector (CN2) : JST B4P-VH or equivalent

| Pin No. | Assignment | Mating Housing | Terminal |
|---|---|---|---|
| 1,2 | DC COM | JST VHR or equivalent | JST SVH-21T-P1.1 or equivalent |
| 3,4 | +V | | |

FAN Connector(CN105) : JST B2B-PH-K-S or equivalent

| Pin No. | Assignment | Mating Housing | Terminal |
|---|---|---|---|
| 1 | DC COM | JST PHR-2 or equivalent | JST SPH-002T-P0.5S or equivalent |
| 2 | +12V | | |

## ■ Block Diagram

PFC fosc : 47KHz
PWM fosc : 65KHz

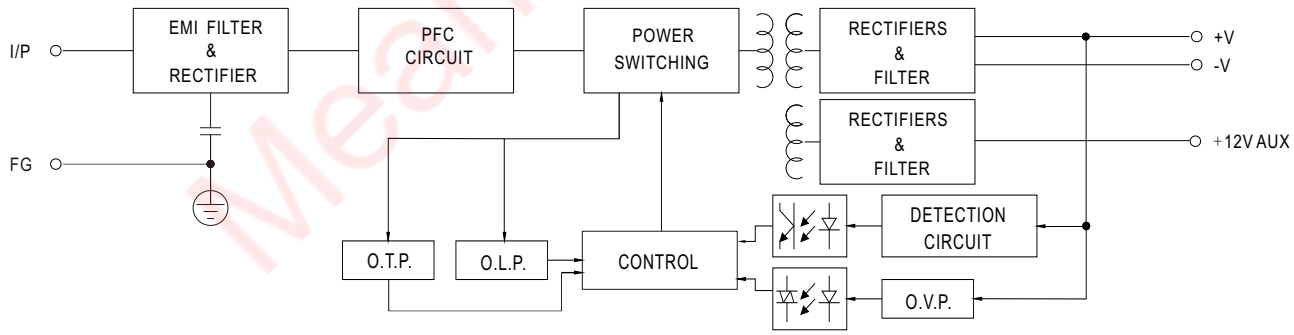


## ■ Output Derating

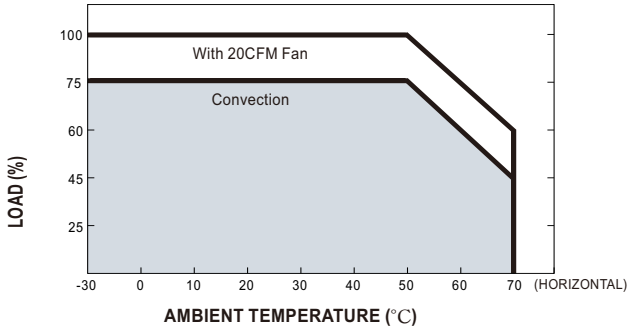


## ■ Output Derating VS Input Voltage

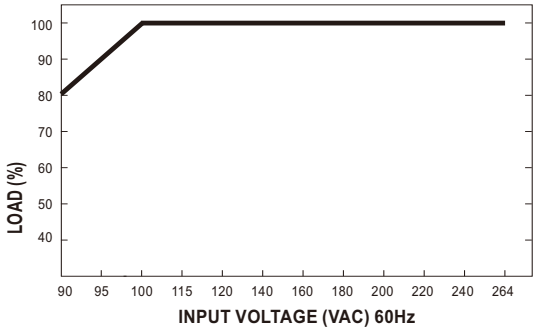


Mean Well Brasil



LRI Distribuída no Brasil pela LRI | vendas@lri.com.br | 51 2129-3000