300W Constant Power Mode LED Driver ELGC-300 series

User's Manual



(for H/M Type) (for H/M Type) Note.10

Features

- Full power at 65~100% operation(Constant Power)
- Protection Functions: OCP,SCP,OVP,OTP
- IP67 design for indoor or outdoor installations
- Function options: output adjustable via potentiometer; 3 in 1 dimming (dim-to-off) ; DALI-2 dimming
- Typical lifetime>50000 hours and 5 years warranty
- Surge protection with 6KV/4KV
- Latest safety requirements of IEC61347/GB19510 and UL8750

Applications

- LED bay lighting
- LED stage lighting
- LED flood lighting
- LED fishing lighting
- LED horticulture lighting
- Stadium lighting
- Type "HL" for use in class Ⅰ, Division 2

GTIN CODE

MW Search: https://www.meanwell.com/serviceGTIN.aspx

Description

ELGC-300 series is a 300W LED AC/DC driver featuring the constant power mode and high voltage output. ELGC-300 operates from 100~305VAC and offers models with different rated current ranging between 1300mA and 8000mA. Thanks to the high efficiency up to 94.5%, with the fanless design, the entire series is able to operate for -40℃~+85℃ case temperature under free air convection. The design of metal housing and IP67 ingress protection level allows this series to fit both indoor and outdoor applications. Moreover the innovative environment-adaptive capability allows this series to reliably light on the LEDs for all kinds of application environments in almost any spots that may install LED luminaires in the world. ELGC-300 is equipped with various function options, such as dimming methodologies, so as to provide the optimal design flexibility for LED lighting system.

Model Encoding

ELGC - 300 - L - A

- A — Function options
- L — Rated output current(L/M/H types)
- 300 — Rated wattage
- ELGC — Series name

Type	IP Level	Function	Note
Blank	IP67	Blank type available by modification	By request
A	IP67	Output constant power adjustable via built-in Io potentiometer	In Stock
AB	IP67	Output constant power adjustable via built-in Io potentiometer + 3 in 1 dimming function (0~10Vdc, 10V PWM signal and resistance)	In Stock
ADA	IP67	DALI-2 control technology with Io Adjustable via built-in Potentiometer	In Stock
D2	IP67	Built-in Smart timer dimming and programmable function.	By request

Distribuída no Brasil pela LRI | vendas@lri.com.br | 51 2129-3000

SPECIFICATION

MODEL			ELGC-300-L-□	ELGC-300-M-□	ELGC-300-H-□
OUTPUT	DEFAULT CURRENT		1400mA	2800mA	5600mA
	RATED POWER	(200 ~ 305VAC)	301W	301W	301
		(100 ~ 180VAC)	256W	256W	256W
	CONSTANT CURRENT REGION		116 ~232V	58 ~ 116V	29 ~ 58V
	FULL POWER CURRENT RANGE		1300~2000mA	2600~4000mA	5200~8000mA
	OPEN CIRCUIT VOLTAGE (max.)		240V	120V	62V
	CURRENT ADJ. RANGE	(200 ~ 305VAC)	650~2000mA	1300~4000mA	2600~8000mA
		(100 ~ 180VAC)	650~1700mA	1300~3400mA	2600~6800mA
	CURRENT RIPPLE		5.0% max. @rated current		
	CURRENT TOLERANCE		±5%		
	SET UP TIME	Note.9	500ms/230VAC, 500ms/115VAC		
INPUT	VOLTAGE RANGE	Note.2	100 ~ 305VAC 142VDC ~ 431VDC (Please refer to "STATIC CHARACTERISTIC" ang " DRIVING METHODS OF LED MODULE"section)		
	FREQUENCY RANGE		47 ~ 63Hz		
	POWER FACTOR (Typ.)		PF≧0.97 / 115VAC, PF≧0.95 / 230VAC, PF≧0.92 / 277VAC at full load (Please refer to "Power Factor Characteristic" section)		
	TOTAL HARMONIC DISTORTION		THD< 10% (@ load≧50% at 115VAC/230VAC ,@load≧75% at 277VAC) Please refer to "TOTAL HARMONIC DISTORTION (THD)" section		
	EFFICIENCY (Typ.)		94.5%	93.5%	92.5%
	AC CURRENT (Typ.)		3A / 115VAC 1.6A / 230VAC 1.3A / 277VAC		
	INRUSH CURRENT(Typ.)		COLD START 45A(t_{width}=1200μs measured at 50% I_{peak}) at 230VAC; Per NEMA 410		
	MAX. NO. of PSUs on 16A CIRCUIT BREAKER		2 unit(circuit breaker of type B) / 4 units(circuit breaker of type C) at 230VAC		
	LEAKAGE CURRENT		<0.75mA / 277VAC		
	STANDBY POWER CONSUMPTION	Note.5	Standby power consumption <0.5W for AB / ADA-Type(Dimming OFF)		
PROTECTION	SHORT CIRCUIT		Constant current limiting, recovers automatically after fault condition is removed		
	OVER VOLTAGE		241 ~ 275V	121 ~ 145V	61 ~ 78V
			Shut down output voltage, re-power on to recovery		
	OVER TEMPERATURE		Tcase>85℃ ±5℃,derate power automatically by 6%/℃ max		
ENVIRONMENT	WORKING TEMP.		Tcase=-40 ~ +85℃(Please refer to "OUTPUT LOAD vs TEMPERATURE" section)		
	MAX. CASE TEMP.		Tcase=+85℃		
	WORKING HUMIDITY		20 ~ 95% RH non-condensing		
	STORAGE TEMP., HUMIDITY		-40 ~ +80℃, 10 ~ 95% RH non-condensing		
	TEMP. COEFFICIENT		±0.03%/℃ (0 ~ 60℃)		
	VIBRATION		10 ~ 500Hz, 5G 12min./1cycle, period for 72min. each along X, Y, Z axes		
SAFETY & EMC	SAFETY STANDARDS		UL8750(type"HL"), CSA C22.2 No. 250.13-12; ENEC BS EN/EN61347-1, BS EN/EN61347-2-13 independent, BS EN/EN62384; EAC TP TC 004;GB19510.1 , GB19510.14; IP67;KC61347-1,KC61347-2-13 approved; Designed refer to AS/NZS 61347 & AS/NZS 60598		
	DALI STANDARDS		Compliance to IEC62386-101,102,207 for ADA Type only		
	WITHSTAND VOLTAGE		I/P-O/P:3.75KVAC I/P-FG:2KVAC O/P-FG:1.5KVAC		
	ISOLATION RESISTANCE		I/P-O/P, I/P-FG, O/P-FG:100M Ohms / 500VDC / 25℃/ 70% RH		
	EMC EMISSION		Compliance to BS EN/EN55015, BS EN/EN61000-3-2 Class C (@ load≧50%); BS EN/EN61000-3-3;KN15		
	EMC IMMUNITY		Compliance to BS EN/EN61000-4-2,3,4,5,6,8,11, BS EN/EN61547, light industry level (surge immunity Line-Earth 6KV, Line-Line 4KV);KN61547		
OTHERS	MTBF		1637.5K hrs min. Telcordia SR-332 (Bellcore) ;170.1K hrs min. MIL-HDBK-217F (25℃)		
	LIFETIME	Note.4	50000 hrs min.		
	DIMENSION		246*77*39.5mm (L*W*H)		
	PACKING		1.45Kg;9pcs/14Kg/0.76CUFT		

NOTE

1. All parameters NOT specially mentioned are measured at 230VAC input, rated current and 25℃ of ambient temperature.
2. De-rating may be needed under low input voltages. Please refer to "STATIC CHARACTERISTIC" sections for details.
3. The driver is considered as a component that will be operated in combination with final equipment. Since EMC performance will be affected by the complete installation, the final equipment manufacturers must re-qualify EMC Directive on the complete installation again.
4. This series meets the typical life expectancy >50,000 hours of operation when Tcase, particularly (tc) point (or TMP, per DLC), is 70℃ or less.
5. To fulfill requirements of the latest ErP regulation for lighting fixture, this LED driver can only be used behind a switch without permanently connected to the mains.
6. Please refer to the warranty statement on MEAN WELL's website at http://www.meanwell.com
7. The ambient temperature derating of 3.5℃/1000m with fanless models and of 5℃/1000m with fan models for operating altitude higher than 2000m(6500ft).
8. For any application note and IP water proof function installation caution, please refer our user manual before using. https://www.meanwell.com/Upload/PDF/LED_EN.pdf
9. Based on IEC 62386-101/102 DALI power on timing and interruption regulations, the set up time needs to test with a DALI controller which can support for DALI power on function, otherwise the set up time will be higher than 0.5 second for DA type.
10. RCM is on a voluntary basis. Non IC classification Independent LED control gear is not suitable for residential installations.
11. Products sourced from the Americas regions may not have the ENEC/BIS/CCC/KC logo. Please contact your MEAN WELL sales for more information.

※ Product Liability Disclaimer : For detailed information, please refer to https://www.meanwell.com/serviceDisclaimer.aspx

LRI Distribuída no Brasil pela LRI | vendas@lri.com.br | 51 2129-3000

■ BLOCK DIAGRAM

PFC fosc : 45KHz
PWM fosc : 100KHz

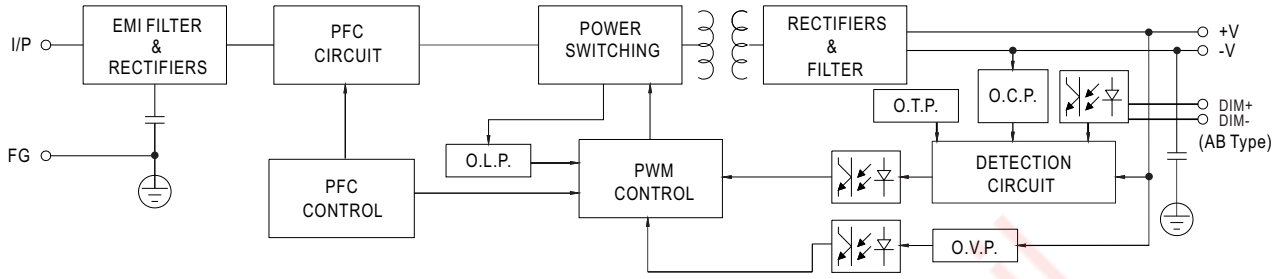

■ DRIVING METHODS OF LED MODULE

※ I-V Operating Area:(Red Line for AC 115V operation)

◎ ELGC-300-L

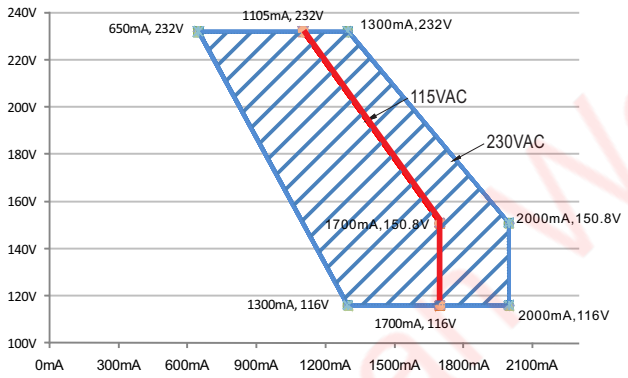

◎ ELGC-300-M

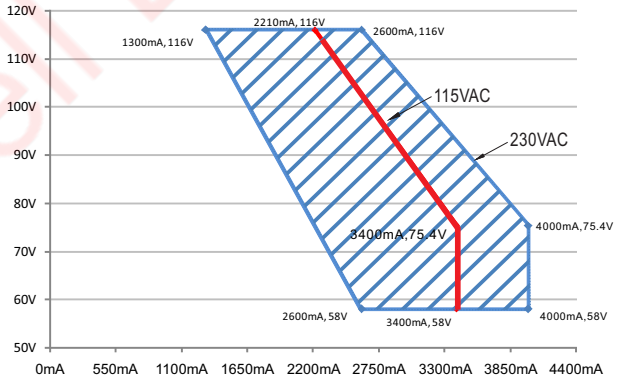

◎ ELGC-300-H

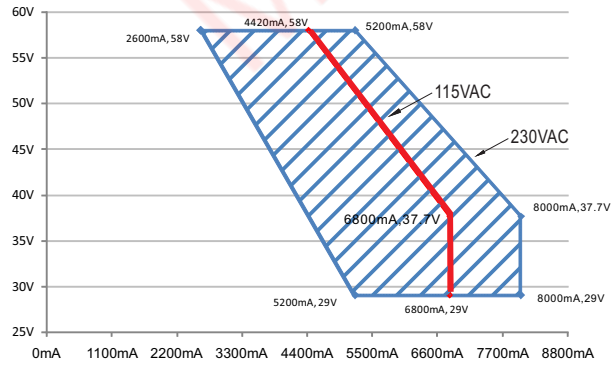

Mean Well Brasil

Distribuída no Brasil pela LRI | vendas@lri.com.br | 51 2129-3000

■ DIMMING OPERATION

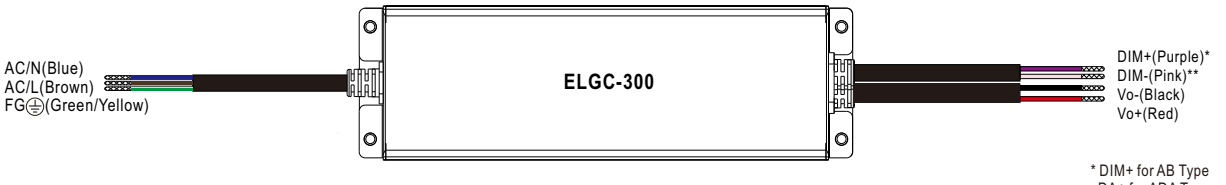

* DIM+ for AB Type
DA+ for ADA Type
PROG+ for D2 Type
**DIM- for AB Type
DA- for ADA Type
PROG- for D2 Type

※ 3 in 1 dimming function (for AB-Type)

- Output constant current level can be adjusted by applying one of the three methodologies between DIM+ and DIM-: 0 ~ 10VDC, or 10V PWM signal or resistance.
- Direct connecting to LEDs is suggested. It is not suitable to be used with additional drivers.
- Dimming source current from power supply: 100 μA (typ.)

◎ Applying additive 0 ~ 10VDC

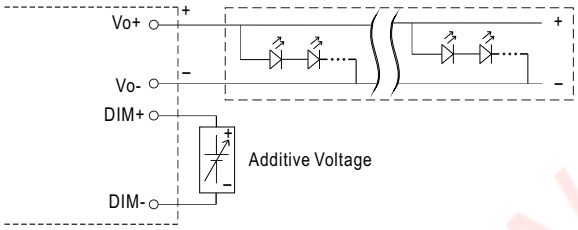

"DO NOT connect "DIM- to Vo-"

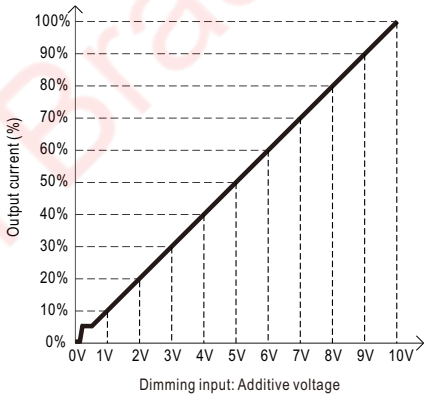

◎ Applying additive 10V PWM signal (frequency range 100Hz ~ 3KHz):

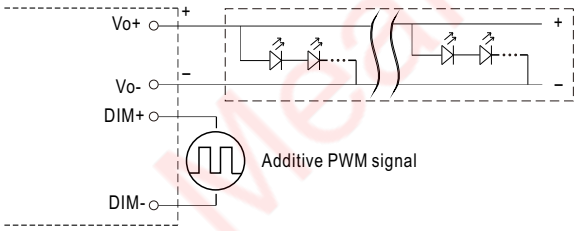

"DO NOT connect "DIM- to Vo-"

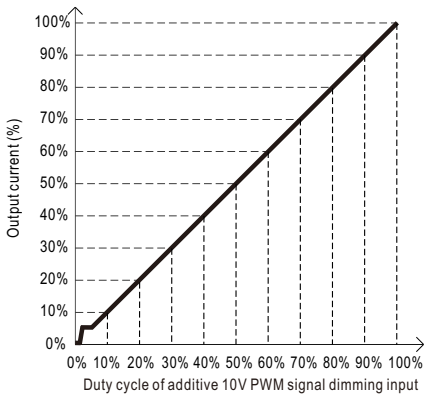

◎ Applying additive resistance:

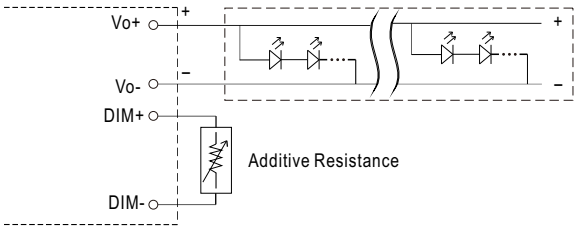

"DO NOT connect "DIM- to Vo-"

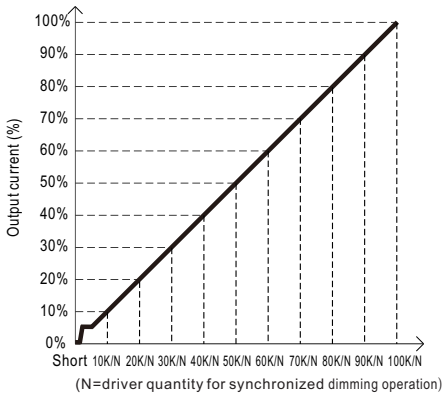

Note : 1. Min. dimming level is about 8% and the output current is not defined when 0%< Iout<8%.
2. The output current could drop down to 0% when dimming input is about 0Ωor 0Vdc, or 10V PWM signal with 0% duty cycle.

Mean Well Brasil

LRI Distribuída no Brasil pela LRI | vendas@lri.com.br | 51 2129-3000

※ **DALI Interface (primary side; for ADA-Type)**

- Apply DALI signal between DA+ and DA-.
- DALI protocol comprises 16 groups and 64 addresses.
- First step is fixed at 8% of output.

※ **Smart timer dimming function (for Dxx-Type by User definition)**

MEAN WELL Smart timer dimming primarily provides the adaptive proportion dimming profile for the output constant current level to perform up to 14 consecutive hours. 3 dimming profiles hereunder are defined accounting for the most frequently seen applications. If other options may be needed, please contact MEAN WELL for details.

Ex : ◎ D01-Type: the profile recommended for residential lighting

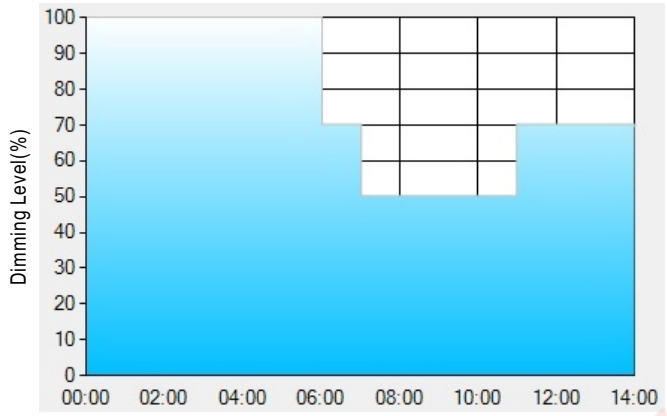

Set up for D01-Type in Smart timer dimming software program:

	T1	T2	T3	T4
TIME**	06:00	07:00	11:00	---
LEVEL**	100%	70%	50%	70%

**: TIME matches Operating Time in the diagram whereas LEVEL matches Dimming Level.

Example: If a residential lighting application adopts D01-Type, when turning on the power supply at 6:00pm, for instance:

[1] The power supply will switch to the constant current level at 100% starting from 6:00pm.

[2] The power supply will switch to the constant current level at 70% in turn, starting from 0:00am, which is 06:00 after the power supply turns on.

[3] The power supply will switch to the constant current level at 50% in turn, starting from 1:00am, which is 07:00 after the power supply turns on.

[4] The power supply will switch to the constant current level at 70% in turn, starting from 5:00am, which is 11:00 after the power supply turns on. The constant current level remains till 8:00am, which is 14:00 after the power supply turns on.

Ex: ◎ D02-Type: the profile recommended for street lighting

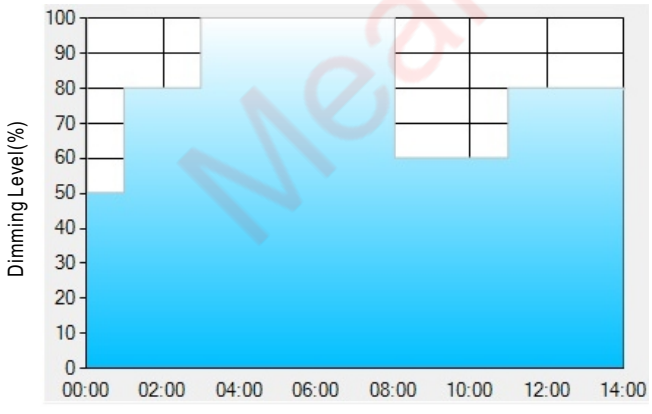

Set up for D02-Type in Smart timer dimming software program:

	T1	T2	T3	T4	T5
TIME**	01:00	03:00	8:00	11:00	---
LEVEL**	50%	80%	100%	60%	80%

**: TIME matches Operating Time in the diagram whereas LEVEL matches Dimming Level.

Example: If a street lighting application adopts D02-Type, when turning on the power supply at 5:00pm, for instance:

[1] The power supply will switch to the constant current level at 50% starting from 5:00pm.

[2] The power supply will switch to the constant current level at 80% in turn, starting from 6:00pm, which is 01:00 after the power supply turns on.

[3] The power supply will switch to the constant current level at 100% in turn, starting from 8:00pm, which is 03:00 after the power supply turns on.

[4] The power supply will switch to the constant current level at 60% in turn, starting from 1:00am, which is 08:00 after the power supply turns on.

[5] The power supply will switch to the constant current level at 80% in turn, starting from 4:00am, which is 11:00 after the power supply turns on. The constant current level remains till 6:30am, which is 14:00 after the power supply turns on.

Mean Well Brasil

LRI Distribuída no Brasil pela LRI | vendas@lri.com.br | 51 2129-3000

Ex: ◎ D03-Type: the profile recommended for tunnel lighting

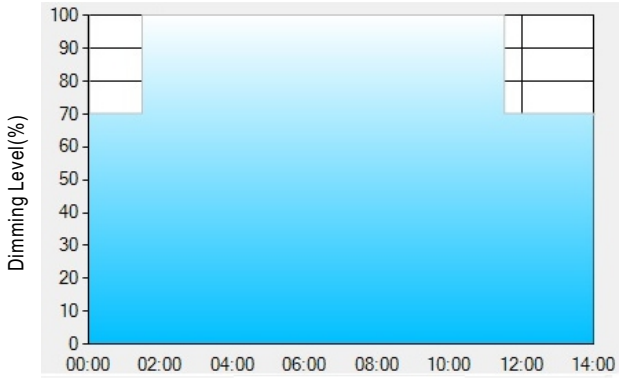

Set up for D03-Type in Smart timer dimming software program:

	T1	T2	T3
TIME**	01:30	11:00	---
LEVEL**	70%	100%	70%

**: TIME matches Operating Time in the diagram whereas LEVEL matches Dimming Level.
Example: If a tunnel lighting application adopts D03-Type, when turning on the power supply at 4:30pm, for instance:
[1] The power supply will switch to the constant current level at 70% starting from 4:30pm.
[2] The power supply will switch to the constant current level at 100% in turn, starting from 6:00pm, which is 01:30 after the power supply turns on.
[3] The power supply will switch to the constant current level at 70% in turn, starting from 5:00am, which is 11:00 after the power supply turns on.
The constant current level remains till 6:30am, which is 14:00 after the power supply turns on.

Mean Well Brasil

Distribuída no Brasil pela LRI | vendas@lri.com.br | 51 2129-3000

■ OUTPUT LOAD vs TEMPERATURE

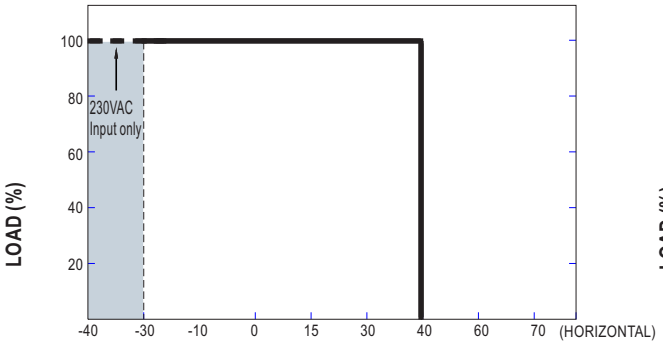

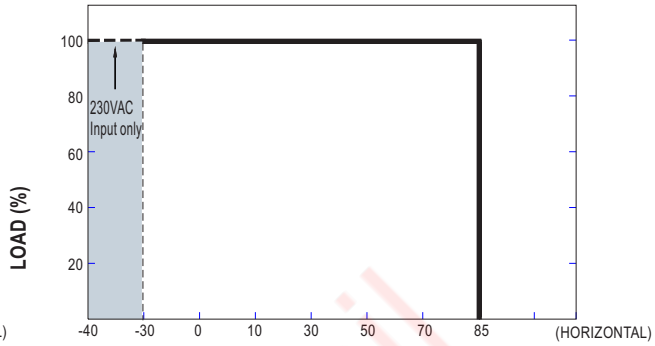

◎ Tcase>85℃ ±5℃ derate power automatically

■ STATIC CHARACTERISTIC

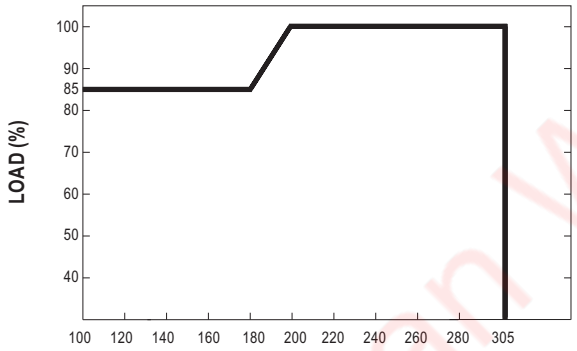

■ POWER FACTOR (PF) CHARACTERISTIC

※ Tcase at 75℃

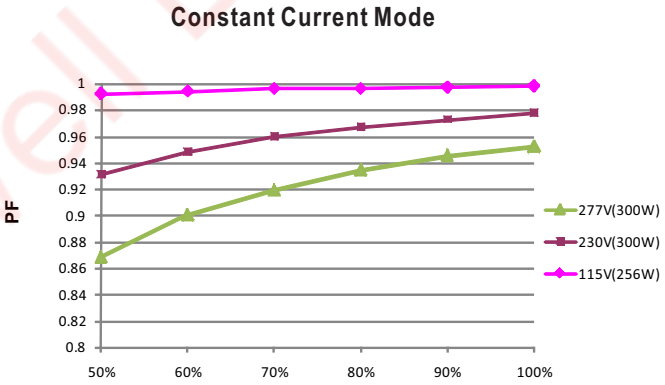

■ TOTAL HARMONIC DISTORTION (THD)

※ ELGC-300-L Model, Tcase at 75℃

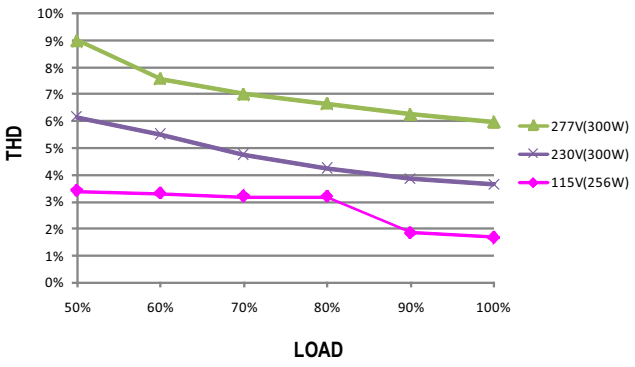

■ EFFICIENCY vs LOAD

ELGC-300 series possess superior working efficiency that up to 94.5% can be reached in field applications.

※ ELGC-300-L Model, Tcase at 75℃

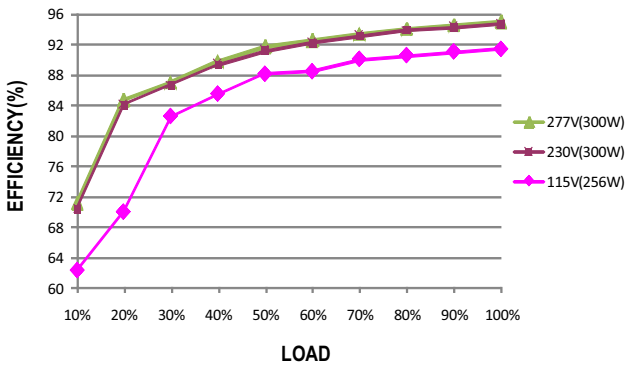

Mean Well Brasil

LRI Distribuída no Brasil pela LRI | vendas@lri.com.br | 51 2129-3000

■ LIFE TIME

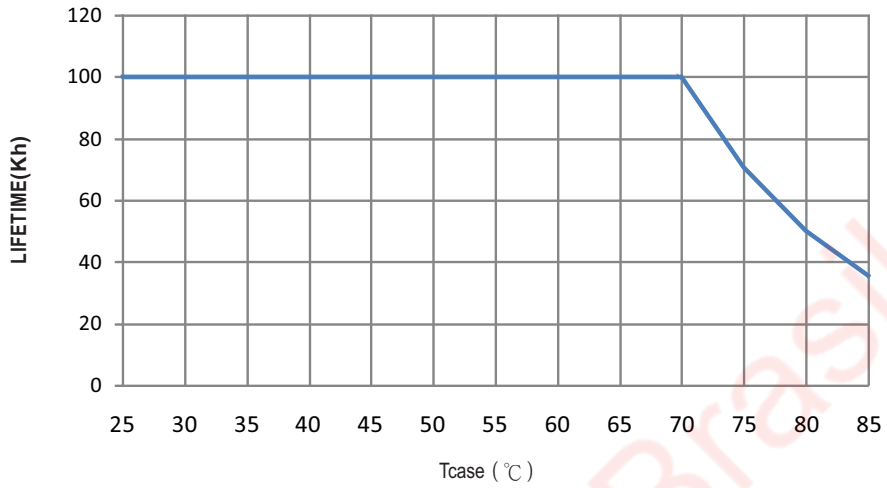

Mean Well Brasil

Distribuída no Brasil pela LRI | vendas@lri.com.br | 51 2129-3000

■ MECHANICAL SPECIFICATION

Case No.:266A Unit:mm

※ A-Type

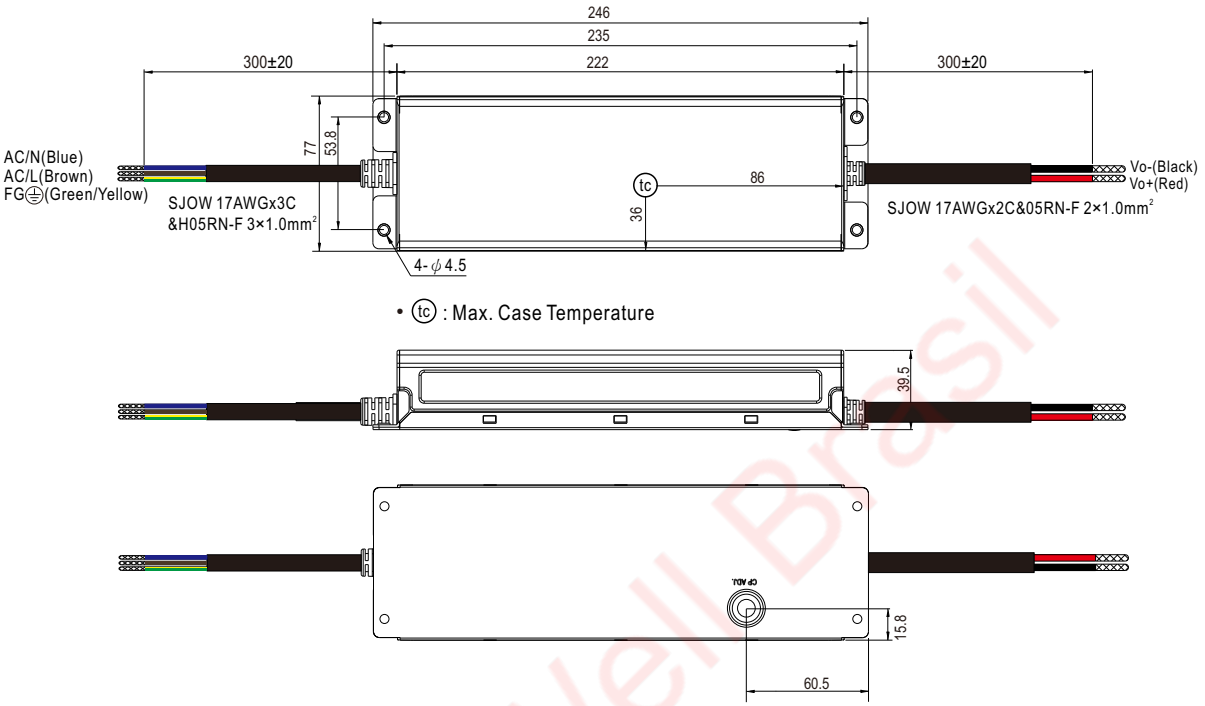

• tc : Max. Case Temperature

※ AB-Type

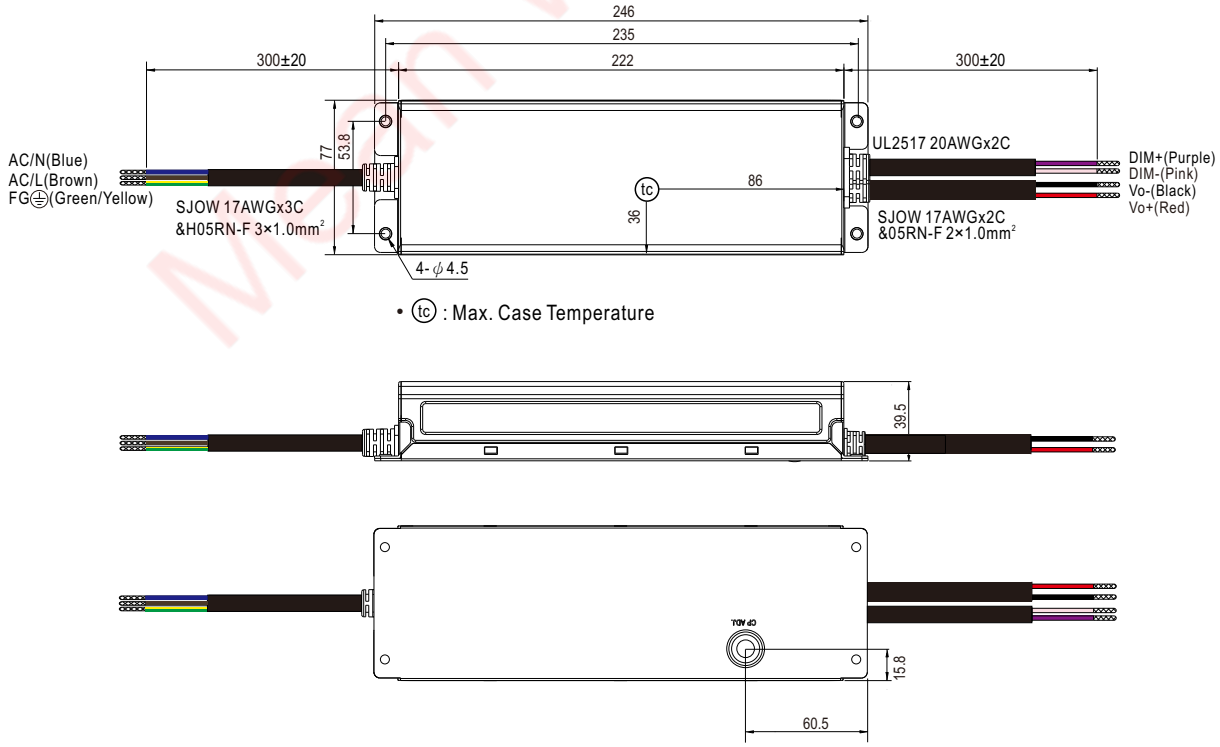

• tc : Max. Case Temperature

Mean Well Brasil

Distribuída no Brasil pela LRI | vendas@lri.com.br | 51 2129-3000

※ **D2-Type**

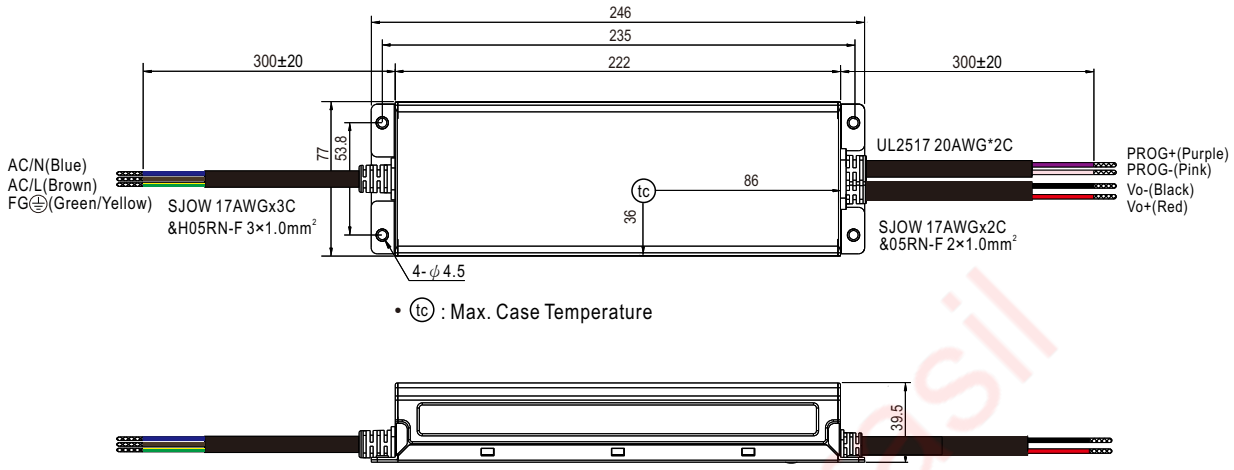

• (tc) : Max. Case Temperature

※ **ADA-Type**

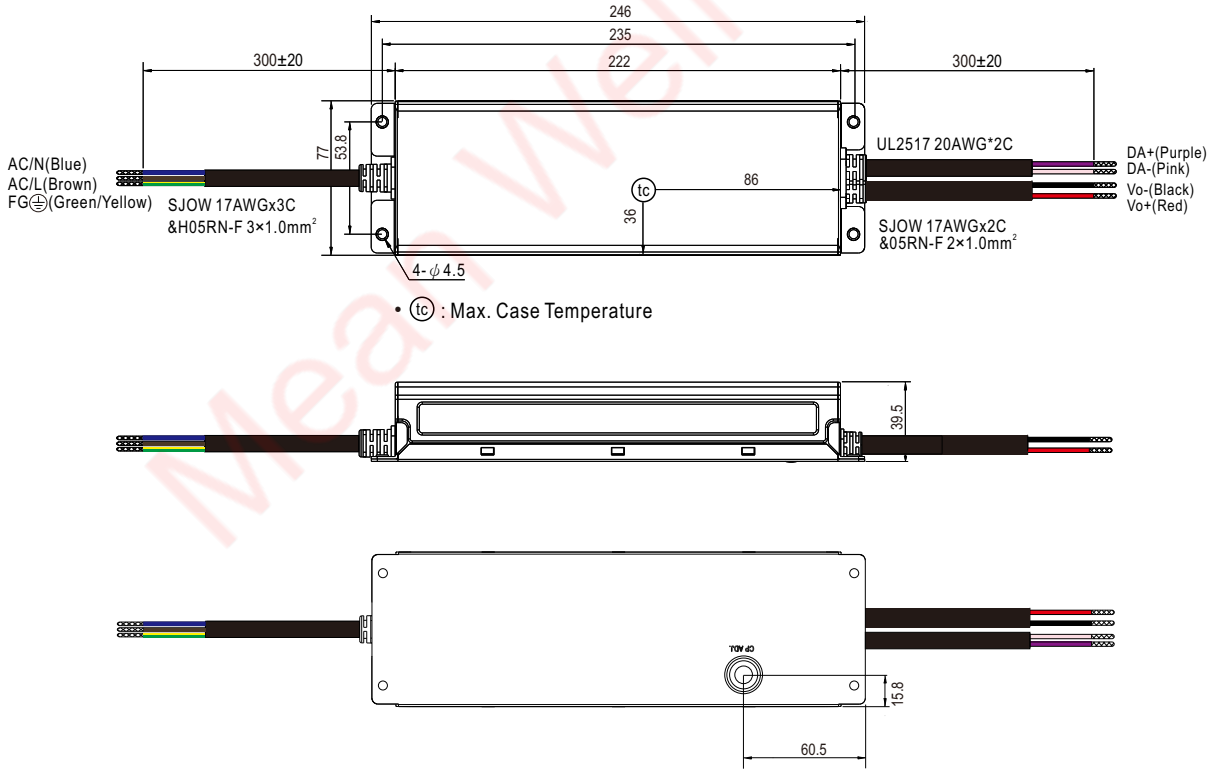

• (tc) : Max. Case Temperature

Mean Well Brasil

LRI Distribuída no Brasil pela LRI | vendas@lri.com.br | 51 2129-3000

■ Recommend Mounting Direction

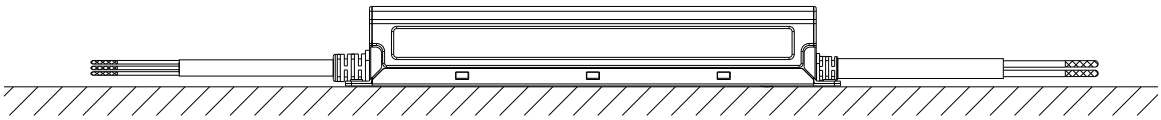

■ INSTALLATION MANUAL

Please refer to : http://www.meanwell.com/manual.html

Mean Well Brasil

Distribuída no Brasil pela LRI | vendas@lri.com.br | 51 2129-3000