40A DIN Rail Type Redundancy Module

DRDN40

User's Manual

Video



UL62368-1 IEC62368-1 TPTC004

Automate Industrial Security Network Telecom

Features

- Support 1+1 and N+1 redundancy system
- 2 channels input and 1 output
- Suitable for redundancy operation of 12V/24V/48V system
- Output current up to 40A
- Cooling by free air convection
- -40~+80°C ultra-wide operating temperature (>+60°C derating)
- 55mm slim width
- Built-in 2 channels DC OK signal and alarm relay contact
- 3 years warranty

Applications

- Industrial control system
- Semiconductor fabrication equipment
- Factory automation
- Electro-mechanical apparatus

GTIN CODE

MW Search: https://www.meanwell.com/serviceGTIN.aspx

Mean Well Brasil

Description

The DRDN40 series is a 40A redundancy module that can be used with a power supply to improve overall system operation reliability. Product key features include:12V/24V/48V input voltage for selection, support N+1 and 1+1 redundancy systems,built-in two rails DC input contacts and single output. The MOSFET technology implemented can reduce heat loss and reduce the voltage difference between the input and output voltages, built-in 2 channels DC OK relay contacts for monitoring output status, ultra-wide operating temperature of -40 to +80°C and narrow width (55mm).

Model Encoding

DRDN40 - 24

- 24 — Intput voltage (12V/24V/48V)
- 40 — Output current (40A)
- DRDN — DIN Rail Redundancy Module

Distribuída no Brasil pela LRI | vendas@lri.com.br | 51 2129-3000

40A DIN Rail Type Redundancy Module DRDN40

SPECIFICATION

MODEL		DRDN40-□		
		□ =12V, 24V, 48V		
INPUT	NUMBER OF INPUT	2 Channels		
	DC NORMAL VOLTAGE	12Vdc	24Vdc	48Vdc
	DC VOLTAGE RANGE	9~14Vdc	19~29Vdc	36~60Vdc
	RATED CURRENT	0~40A per input Continuous		
	VOLTAGE DROP (Vin-Vout) (max.)	0.3V		
	PEAK CURRENT	0~60A per input 5Sec.		
	EFFICIENCY (Typ.)	98%		
	INPUT REVERSE CURRENT (max.)	1mA		
	INPUT REVERSE VOLTAGE (max.)	40Vdc	40Vdc	65Vdc
OUTPUT	RATED CURRENT	0~40A, Continuous		
	PEAK CURRENT (max.)	60A, 5Sec.		
	CAPACITANCE(Typ.)	320uF		
	STANDBY POWER LOSSES(Typ.)	1.5W		
PROTECTION	OVERLOAD	<60A,5Sec. No damage		
	SHORT CIRCUIT	<60A,5Sec. No damage		
FUNCTION	REDUNDANCY	For 1+1 redundancy ,and support N+1 redundancy		
	BOTH INPUTS VOLTAGE ALARM	<8.5V or >14.7V (±5%)	<18V or >31V (±5%)	<34.2V or >63V (±5%)
	RELAY	30Vdc/1A resistive load		
	LED STATUS DISPLAY	Green LED OK		
ENVIRONMENT	COOLING	Free air convection		
	WORKING TEMP. Note.2	-40 ~ +80℃ (Refer to "Derating Curve")		
	WORKING HUMIDITY	5 ~ 95% RH non-condensing		
	STORAGE TEMP.	-40 ~ +85℃		
	TEMP. COEFFICIENT	±0.03%/℃ (0 ~ 60℃)		
	VIBRATION	Component:10 ~ 500Hz, 5G 10min./1cycle, 60min. each along X, Y, Z axes; Mounting: Compliance to IEC61373		
	OPERATING ALTITUDE Note.3	5000 meters/OVC II		
SAFETY & EMC (Note.4)	SAFETY STANDARDS	IEC62368-1, UL62368-1, EAC TP TC 004 approved		
	WITHSTAND VOLTAGE	IP/OP - Chassis : 0.5KVac ; IP/OP- Relay : 0.5KVac ; Relay - Chassis : 0.5KVac		
	ISOLATION RESISTANCE	IP/OP - Chassis, IP/OP- Relay, Relay - Chassis:>100M Ohms / 500Vdc / 25℃/ 70% RH		
	EMC EMISSION	**Parameter**	**Standard**	**Test Level / Note**
		Conducted	BS EN/EN55032(CISPR32)	Class B
		Radiated	BS EN/EN55032(CISPR32)	Class B
		Voltage Flicker	-----	-----
		Harmonic Current	-----	-----
	EMC IMMUNITY	BS EN/EN55035, BS EN/EN61000-6-2(BS EN/EN50082-2)		
		Parameter	**Standard**	**Test Level / Note**
		ESD	BS EN/EN61000-4-2	Level 4, 15KV air ; Level 3, 8KV contact; criteria A
		Radiated	BS EN/EN61000-4-3	Level 3, 10V/m ; criteria A
		EFT / Burst	BS EN/EN61000-4-4	Level 3, 2KV ; criteria A
		Surge	BS EN/EN61000-4-5	Level 3, 1KV/Line-Line ;Level 3, 2KV/Line-Line-Chassis ;criteria A
		Conducted	BS EN/EN61000-4-6	Level 3, 10V ; criteria A
		Magnetic Field	BS EN/EN61000-4-8	Level 4, 30A/m ; criteria A
OTHERS	MTBF	1672.9K hrs min. Telcordia SR-332 (Bellcore) ; 499.5K hrs min. MIL-HDBK-217F (25℃)		
	DIMENSION	55*125.2*100mm (W*H*D)		
	PACKING	0.5Kg;20psc/11Kg/1.49CUFT		

NOTE

1. All parameters NOT specially mentioned are measured at normal input(12V/24V/48V) , rated load and 25℃ of ambient temperature.
2. Derating may be needed over high ambient temperature. Please check the derating curve for more details.
3. The ambient temperature derating of 3.5℃/1000m with fanless models and of 5℃/1000m with fan models for operating altitude higher than 2000m(6500ft).
4. The power supply is considered as an independent unit, but the final equipment still need to re-confirm that the whole system complies with the EMC directives. For guidance on how to perform these EMC tests, please refer to “EMI testing of component power supplies.” (as available on https://www.meanwell.com//Upload/PDF/EMI_statement_en.pdf)

※ Product Liability Disclaimer : For detailed information, please refer to https://www.meanwell.com/serviceDisclaimer.aspx

Mean Well Brasil

LRI Distribuída no Brasil pela LRI | vendas@lri.com.br | 51 2129-3000

■ Block Diagram

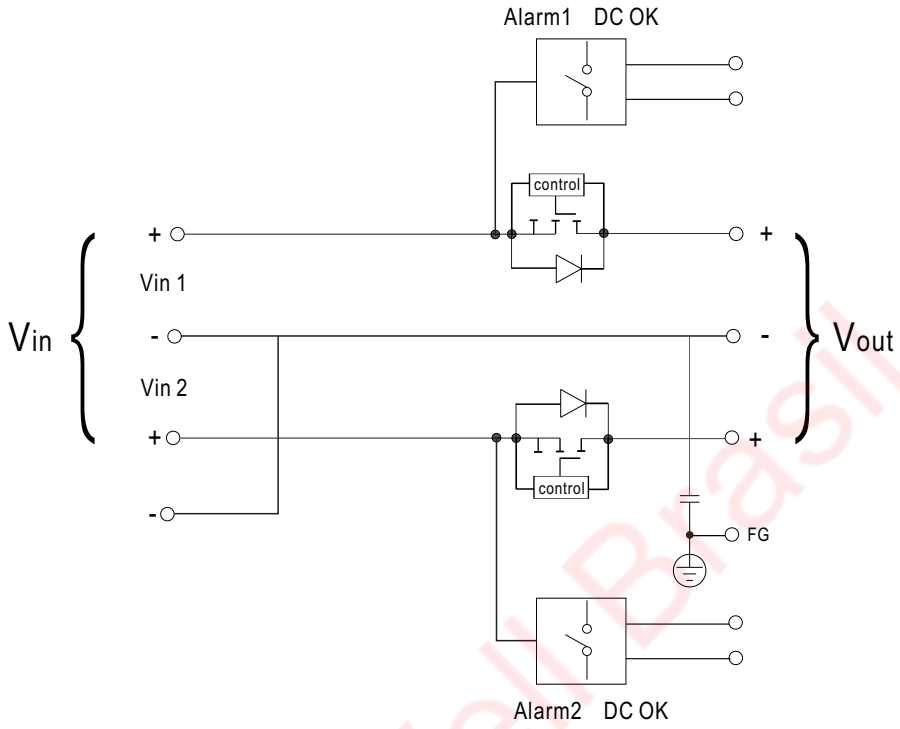

■ DC OK Relay Contact

Contact Ratings (max.)	30V/1A resistive load
Contact Close(DC OK)	PSU turns on
Contact Open(DC Fail)	PSU turns off / over or under input voltage

■ Derating Curve

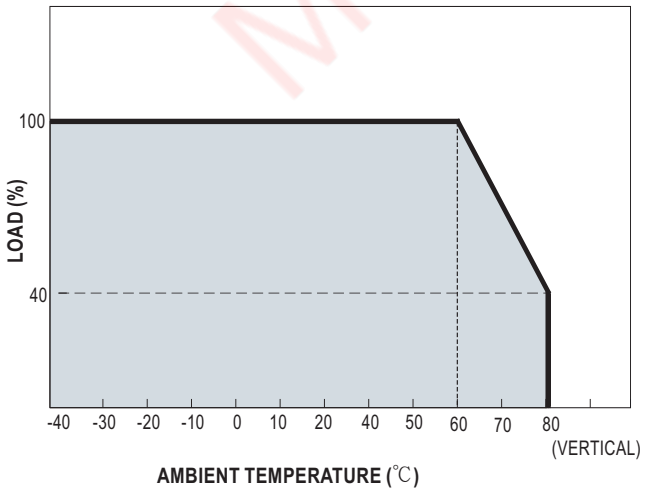

■ Output Derating VS Input Voltage

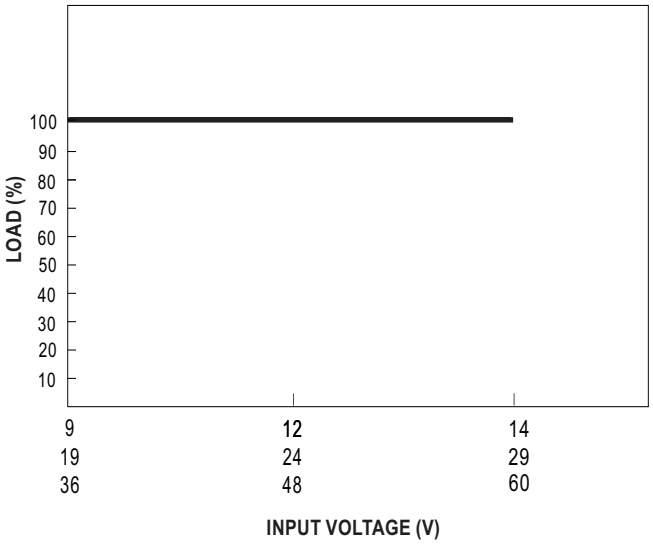

Mean Well Brasil

LRI Distribuída no Brasil pela LRI | vendas@lri.com.br | 51 2129-3000

■ Typical Application Notes

1. 1+1 Redundancy:

Using 1 more PSU as the redundant unit

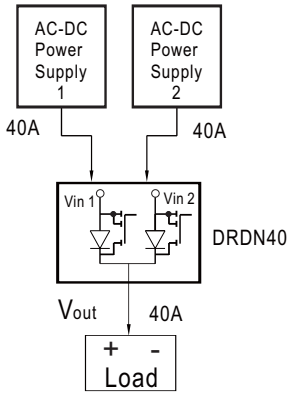

2. 1+N Redundancy:

Using more PSUs as the redundant units to increase the reliability

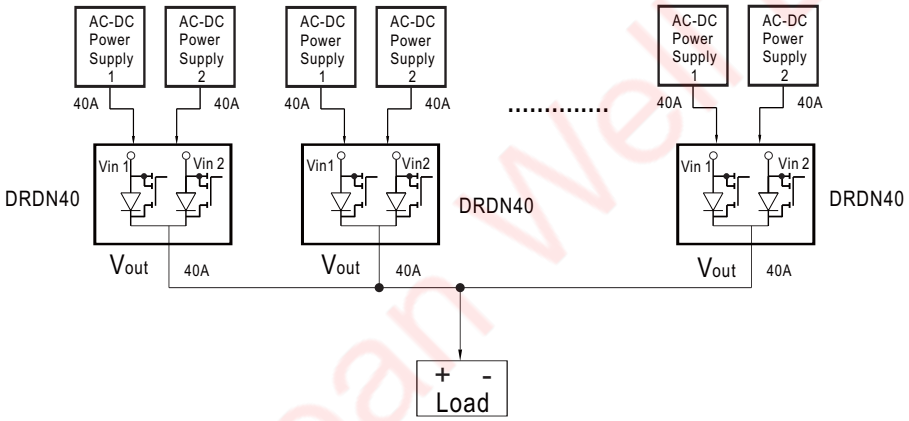

3. Single Use:

Connecting only one PSU to one DRDN40 to reduce the stress of the MOSFET and hence increase the reliability

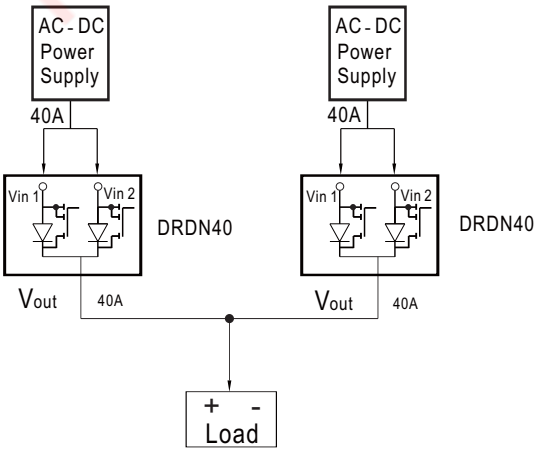

Mean Well Brasil

Distribuída no Brasil pela LRI | vendas@lri.com.br | 51 2129-3000

40A DIN Rail Type Redundancy Module DRDN40

■ Mechanical Specification

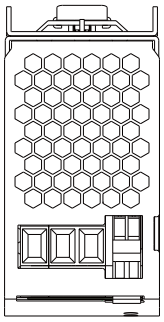

Top View

Case No.923E Unit:mm

Terminal Pin No. Assignment (TB1,TB2,TB3)

Pin No.	Assignment
1,2	Alarm1 DC OK
3,4	Alarm2 DC OK
5	FG
6	DC output +Vout
7	DC output -Vout

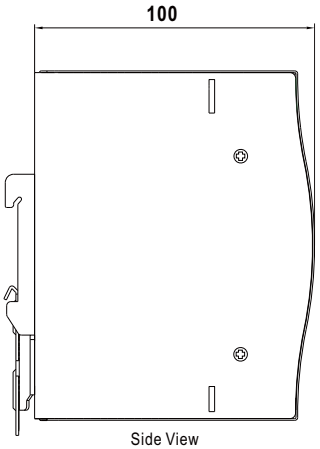

Side View

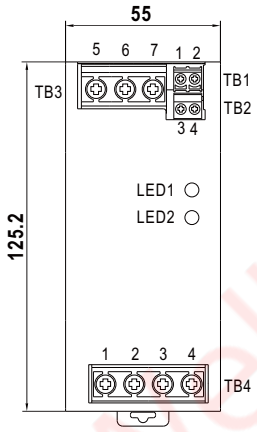

Front View

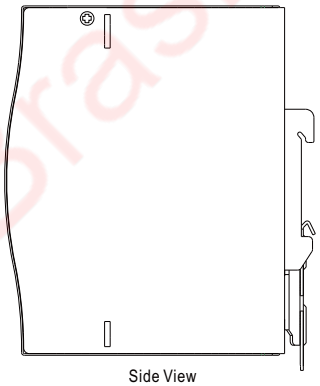

Side View

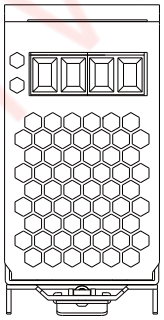

Bottom View

Terminal Pin No. Assignment (TB4)

Pin No.	Assignment
1	DC input +Vin1
2	DC input -Vin1
3	DC input +Vin2
4	DC input -Vin2

■ Installation Instruction

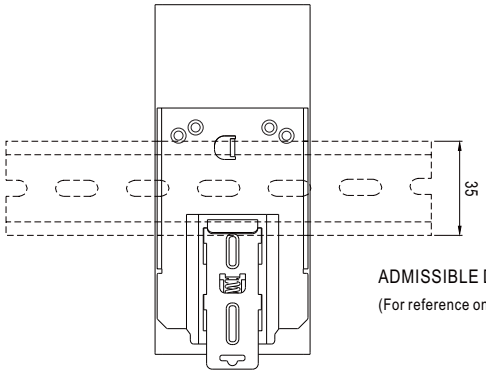

Back View

This series fits DIN rail TS35/7.5 or TS35/15.
For installation details, please refer to the Instruction manual.

ADMISSIBLE DIN-RAIL:TS35/7.5 OR TS35/15
(For reference only. Not included with unit.)

■ Installation Manual

Please refer to : http://www.meanwell.com/manual.html

Mean Well Brasil

LRI Distribuída no Brasil pela LRI | vendas@lri.com.br | 51 2129-3000