DR-UPS40

40A DC UPS Module

User's Manual



Features :

- Battery controller for DIN Rail UPS system
- Parallel connection to DC BUS
- Suitable for 24V system up to 40A
- Installed on DIN Rail TS35 / 7.5 or 15
- Built-in battery test function
- Battery polarity protection
- Relay contact signal output and LED indicator for DC BUS OK, Battery Fail, and Battery Discharge
- Cooling by free air convection
- 3 years warranty

AS/NZS62368-1 TPTC004

GTIN CODE

MW Search: https://www.meanwell.com/serviceGTIN.aspx

SPECIFICATION

MODEL		DR-UPS40
DC INPUT / DC BUS	DC VOLTAGE (Typ.) Note.5	24 ~ 29V
	RATED CURRENT	40A
BATTERY INPUT / OUTPUT	VOLTAGE RANGE (Typ.)	21 ~ 29V
	CURRENT RANGE	0 ~ 40A
	CHARGE CURRENT (Typ.) Note.4	2A
	EXTERNAL BATTERY (Typ.)	4 / 7 / 12AH / 24V
FUNCTION	RELAY CONTACT RATING (max.)	30VDC, 1A
	DC BUS OK	Relay contact : Short when DC voltage between 21~29V(±3%), relay contacts
		LED(Green) : DC BUS OK : light ; DC BUS fail : dark
	BATTERY FAIL Note.2	Short when battery voltage falls below 21.9V(±3%) or battery failure is observed through the battery test function, relay contacts
		LED(Red) : Battery over-discharge warning or battery broken : light ; Battery OK : dark
	BATTERY DISCHARGE	Relay contact : Short when battery in discharge condition, relay contacts
		LED(Yellow):light : Battery discharging ; dark : Battery is not discharging or discharging current<2.0A
ENVIRONMENT	WORKING TEMP.	-20 ~ +70℃
	WORKING HUMIDITY	20 ~ 90% RH
	STORAGE TEMP., HUMIDITY	-20 ~ +85℃, 10 ~ 95% RH
	VIBRATION	Component : 10 ~ 500Hz, 2G 10min./1cycle, 60min. each X, Y, Z axes ; Mounting : Compliance to IEC600068-2-6
SAFETY & EMC (Note 3)	WITHSTAND VOLTAGE	Terminal-Chassis :0.5KVAC, Relay Contacts-Terminal :0.5KVAC
	ISOLATION RESISTANCE	Terminal-Chassis :>100M Ohms / 500VDC / 25℃/ 70% RH
	EMC EMISSION	Compliance to BS EN/EN55032 (CISPR32) Class B, BS EN/EN61000-3-2,-3, EAC TP TC 020
	EMC IMMUNITY	Compliance to BS EN/EN61000-4-2,3,4,5,6,8,11, heavy industry level, criteria A, EAC TP TC 020
OTHERS	MTBF	1365.7K hrs min. Telcordia SR-332 (Bellcore) ; 161.9K hrs min. MIL-HDBK-217F (25℃)
	DIMENSION	55.5*125.2*100mm (W*H*D)
	PACKING	0.55Kg; 20pcs/12Kg/1.49CUFT

NOTE

1. All parameters NOT specially mentioned are measured at rated load and 25℃ of ambient temperature.
2. Battery fail will only function at UPS mode with battery connected. Every 25 seconds, unit will send out test signal through "Battery Fail" relay contact and LED indicator once the battery is fail.
3. The power supply is considered a component which will be installed into a final equipment. All the EMC tests are been executed by mounting the unit on a 360mm*360mm metal plate with 1mm of thickness. The final equipment must be re-confirmed that it still meets EMC directives. For guidance on how to perform these EMC tests, please refer to "EMI testing of component power supplies." (as available on https://www.meanwell.com//Upload/PDF/EMI_statement_en.pdf)
4. Battery charging will be in progress when DC input > battery voltage.
5. DR-UPS40 will be in operation when DC input is applied at the beginning.
6. The ambient temperature derating of 3.5℃/1000m with fanless models and of 5℃/1000m with fan models for operating altitude higher than 2000m(6500ft).

※ Product Liability Disclaimer : For detailed information, please refer to https://www.meanwell.com/serviceDisclaimer.aspx

MW Brasil

LRI Distribuída no Brasil pela LRI | vendas@lri.com.br | 51 2129-3000

■ Mechanical Specification

Case No.923D Unit:mm

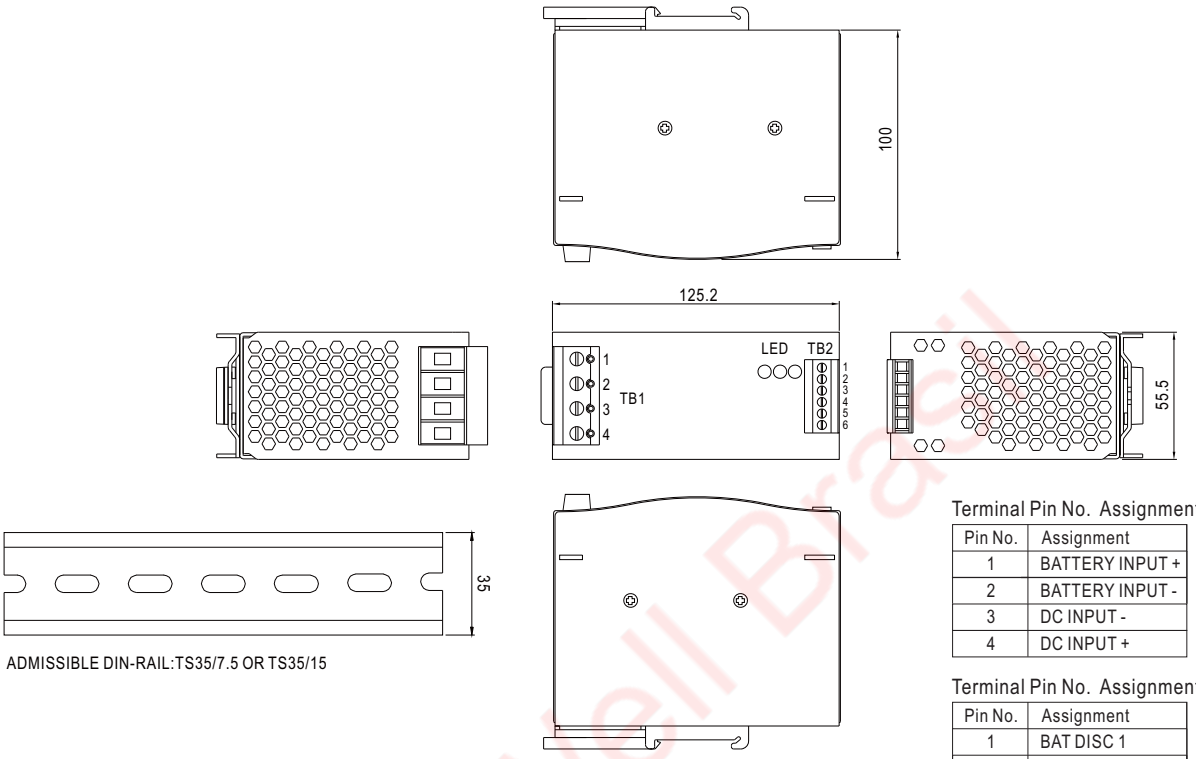

ADMISSIBLE DIN-RAIL:TS35/7.5 OR TS35/15

Terminal Pin No. Assignment (TB1)

Pin No.	Assignment
1	BATTERY INPUT +
2	BATTERY INPUT -
3	DC INPUT -
4	DC INPUT +

Terminal Pin No. Assignment (TB2)

Pin No.	Assignment
1	BAT DISC 1
2	BAT DISC 2
3	BAT FAIL 1
4	BAT FAIL 2
5	DC OK 1
6	DC OK 2

■ Block Diagram

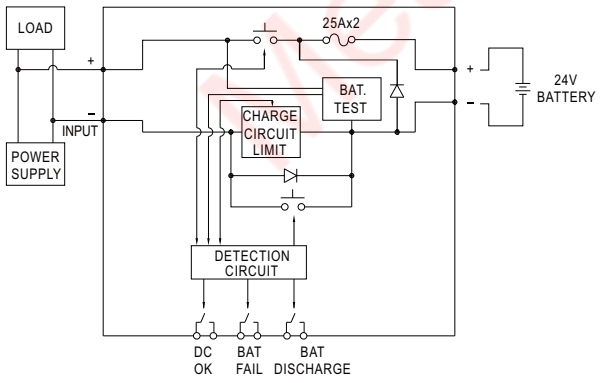

■ Derating Curve

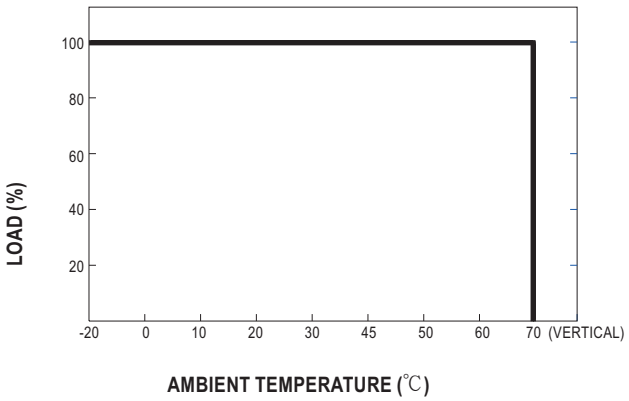

Mean Well Brasil

LRI Distribuída no Brasil pela LRI | vendas@lri.com.br | 51 2129-3000

■ Suggested Application

1.Back up connection for AC interruption

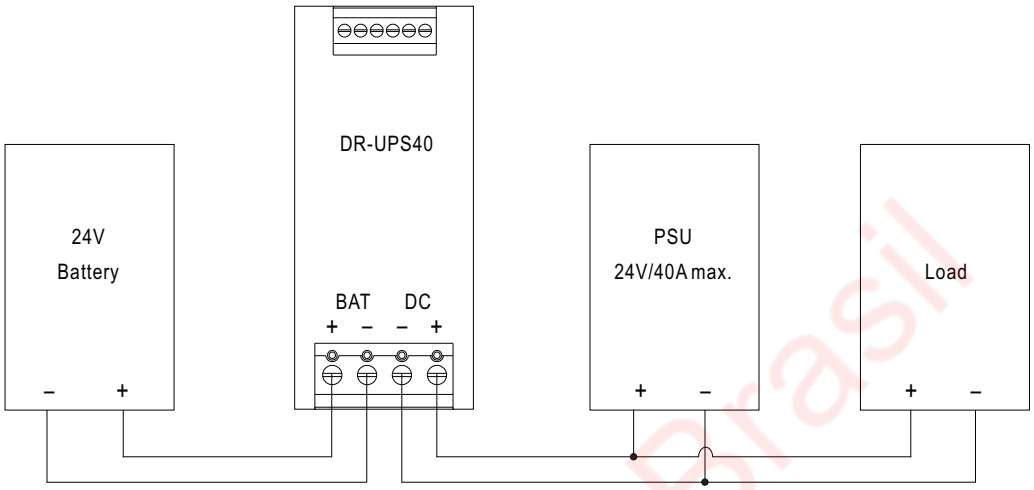

2.Combine redundancy module (DR-RDN20) to back up AC interruption or failure of PSU

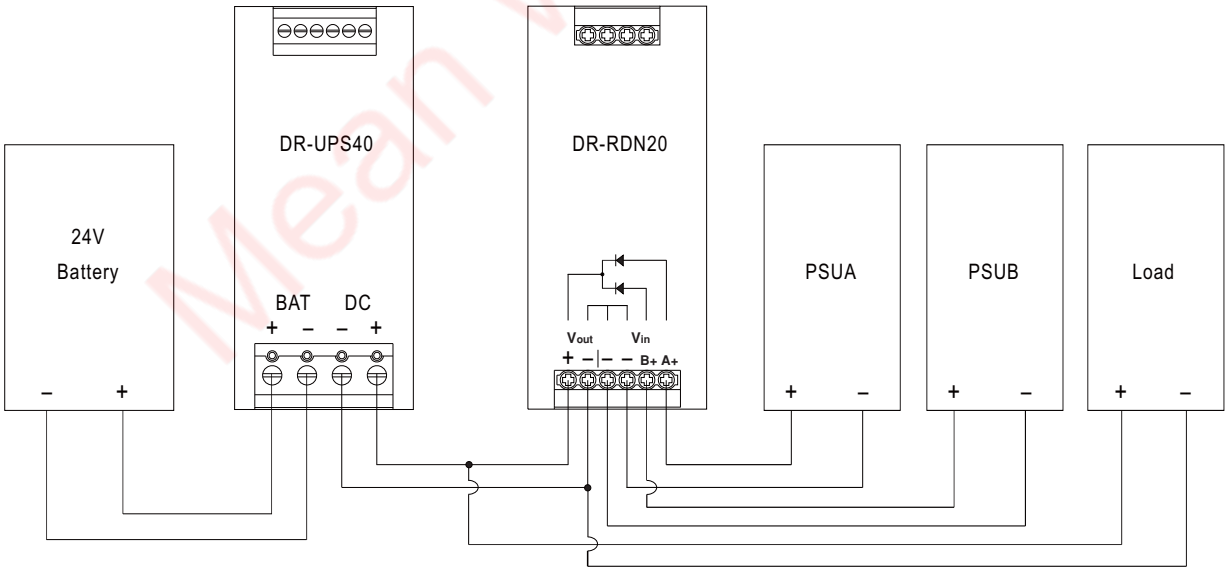

Mean Well Brasil

Distribuída no Brasil pela LRI | vendas@lri.com.br | 51 2129-3000