60W Single Output Industrial DIN Rail Power Supply

DR-60 series



■ Features :

- Universal AC input/Full range
- Protections: Short circuit / Overload / Over voltage
- Cooling by free air convection
- Can be installed on DIN rail TS-35/7.5 or 15
- UL 508(industrial control equipment)approved
- Isolation classII
- LED indicator for power on
- 100% full load burn-in test
- 3 years warranty

SPECIFICATION

MODEL		DR-60-5	DR-60-12	DR-60-15	DR-60-24
OUTPUT	DC VOLTAGE	5V	12V	15V	24V
	RATED CURRENT	6.5A	4.5A	4A	2.5A
	CURRENT RANGE	0 ~ 6.5A	0 ~ 4.5A	0 ~ 4A	0 ~ 2.5A
	RATED POWER	32.5W	54W	60W	60W
	RIPPLE & NOISE (max.) Note.2	80mVp-p	120mVp-p	120mVp-p	150mVp-p
	VOLTAGE ADJ. RANGE	4.75 ~ 5.5V	11.1 ~ 13.2V	13.5 ~ 16.5V	21.6 ~ 26.4V
	VOLTAGE TOLERANCE Note.3	±2.0%	±1.0%	±1.0%	±1.0%
	LINE REGULATION	±1.0%	±1.0%	±1.0%	±1.0%
	LOAD REGULATION	±1.0%	±1.0%	±1.0%	±1.0%
	SETUP, RISE TIME	100ms, 30ms/230VAC 200ms, 30ms/115VAC at full load			
	HOLD UP TIME (Typ.)	100ms/230VAC 23ms/115VAC at full load			
INPUT	VOLTAGE RANGE	88 ~ 264VAC 124 ~ 370VDC			
	FREQUENCY RANGE	47 ~ 63Hz			
	EFFICIENCY (Typ.)	76%	82%	83%	84%
	AC CURRENT (Typ.)	1.2A/115VAC 0.8A/230VAC			
	INRUSH CURRENT (Typ.)	COLD START 18A/115VAC 36A/230VAC			
PROTECTION	OVERLOAD	105 ~ 160% rated output power			
		Protection type : Constant current limiting, recovers automatically after fault condition is removed			
	OVER VOLTAGE	5.75 ~ 6.9V	13.8 ~ 16.2V	17.25 ~ 20.25V	27.6 ~ 32.4V
		Protection type : Shut down o/p voltage, re-power on to recover			
ENVIRONMENT	WORKING TEMP.	-20 ~ +60℃ (Refer to "Derating Curve")			
	WORKING HUMIDITY	20 ~ 90% RH non-condensing			
	STORAGE TEMP., HUMIDITY	-40 ~ +85℃, 10 ~ 95% RH			
	TEMP. COEFFICIENT	±0.03%/℃ (0 ~ 50℃)			
	VIBRATION	10 ~ 500Hz, 2G 10min./1cycle, period for 60min. each along X, Y, Z axes; Mounting: Compliance to IEC60068-2-6			
SAFETY & EMC (Note 4)	SAFETY STANDARDS	UL60950-1, TUV EN60950-1 approved, Design refer to EN50178			
	WITHSTAND VOLTAGE	I/P-O/P:3KVAC			
	ISOLATION RESISTANCE	I/P-O/P:100M Ohms / 500VDC / 25℃/ 70% RH			
	EMC EMISSION	Compliance to EN55032 (CISPR32) Class B, EN61000-3-2,-3			
	EMC IMMUNITY	Compliance to EN61000-4-2, 3, 4, 5, 6, 8, 11, EN55024, EN61000-6-2, EN61204-3, heavy industry level, criteria A			
OTHERS	MTBF	216.2K hrs min. MIL-HDBK-217F (25℃)			
	DIMENSION	78*93*56mm (W*H*D)			
	PACKING	0.3Kg; 48pcs/15.4Kg/1.02CUFT			
NOTE	1. All parameters NOT specially mentioned are measured at 230VAC input, rated load and 25℃ of ambient temperature. 2. Ripple & noise are measured at 20MHz of bandwidth by using a 12" twisted pair-wire terminated with a 0.1uf & 47uf parallel capacitor. 3. Tolerance : includes set up tolerance, line regulation and load regulation. 4. The power supply is considered a component which will be installed into a final equipment. The final equipment must be re-confirmed that it still meets EMC directives.				

Mean Well Brasil

LRI Distribuída no Brasil pela LRI | vendas@lri.com.br | 51 2129-3000

■ Mechanical Specification

Case No.918B Unit:mm

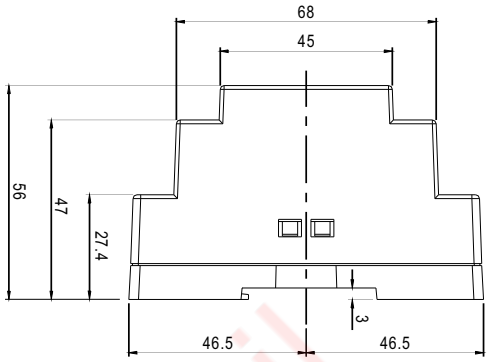

Terminal Pin No. Assignment

Pin No.	Assignment	Pin No.	Assignment
1	AC/N	5,6	-V
2	AC/L	7	LED
3,4	+V	8	+V ADJ.

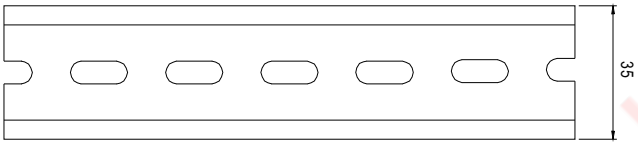

ADMISSIBLE DIN-RAIL:TS35/7.5 OR TS35/15

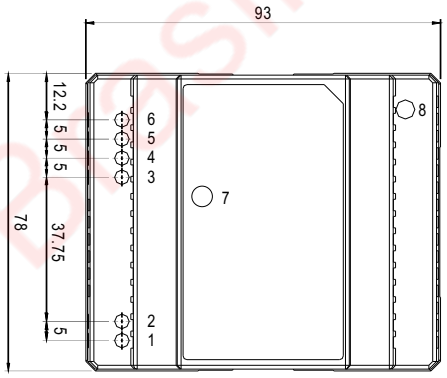

■ Block Diagram

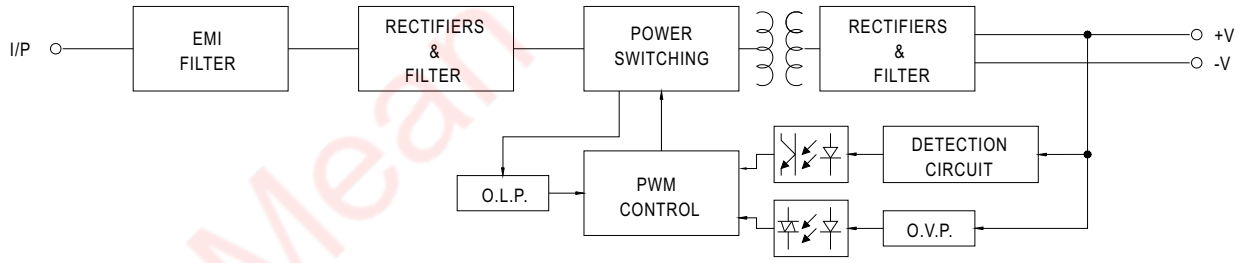

■ Derating Curve

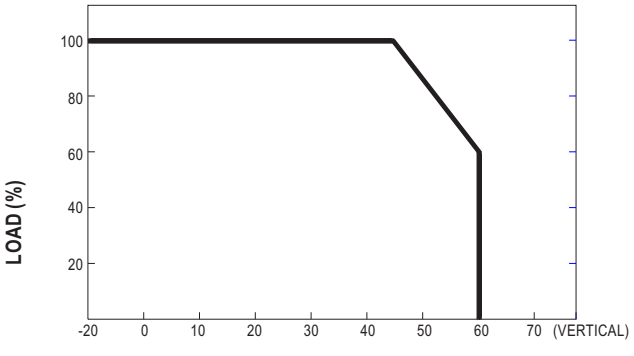

Distribuída no Brasil pela LRI | vendas@lri.com.br | 51 2129-3000